TOSHIBA

FILE NO. 050-200108

SERVICE MANUAL

COLOR TELEVISION

19A21

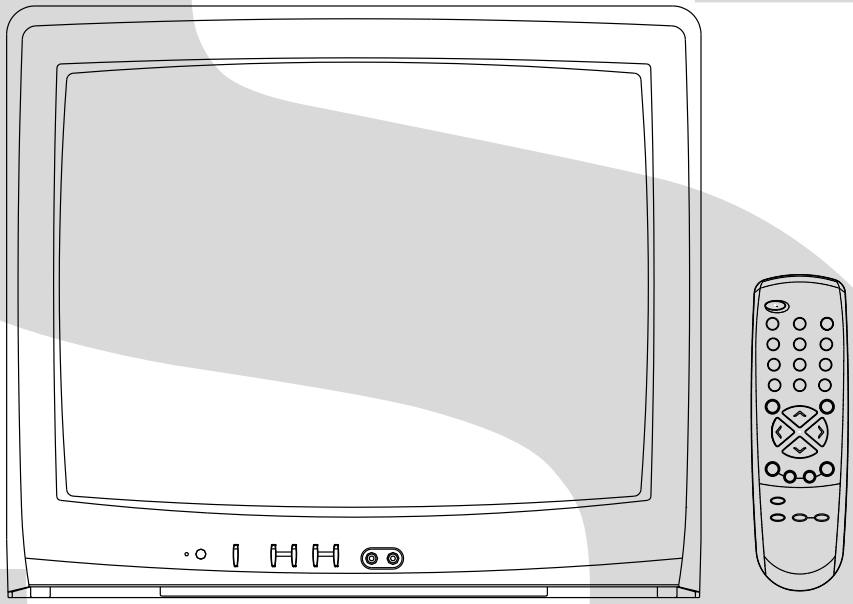

SERVICING NOTICES ON CHECKING

1. KEEP THE NOTICES

As for the places which need special attentions, they are indicated with the labels or seals on the cabinet, chassis and parts. Make sure to keep the indications and notices in the operation manual.

2. AVOID AN ELECTRIC SHOCK

There is a high voltage part inside. Avoid an electric shock while the electric current is flowing.

3. USE THE DESIGNATED PARTS

The parts in this equipment have the specific characters of incombustibility and withstand voltage for safety. Therefore, the part which is replaced should be used the part which has the same character.
Especially as to the important parts for safety which is indicated in the circuit diagram or the table of parts as a ⚠ mark, the designated parts must be used.

4. PUT PARTS AND WIRES IN THE ORIGINAL POSITION AFTER ASSEMBLING OR WIRING

There are parts which use the insulation material such as a tube or tape for safety, or which are assembled in the condition that these do not contact with the printed board.
The inside wiring is designed not to get closer to the pyrogenic parts and high voltage parts. Therefore, put these parts in the original positions.

5. TAKE CARE TO DEAL WITH THE CATHODE-RAY TUBE

In the condition that an explosion-proof cathode-ray tube is set in this equipment, safety is secured against implosion. However, when removing it or serving from backward, it is dangerous to give a shock. Take enough care to deal with it.

6. AVOID AN X-RAY

Safety is secured against an X-ray by considering about the cathode-ray tube and the high voltage peripheral circuit, etc.
Therefore, when repairing the high voltage peripheral circuit, use the designated parts and make sure not modify the circuit.
Repairing except indicates causes rising of high voltage, and it emits an X-ray from the cathode-ray tube.

7. PERFORM A SAFETY CHECK AFTER SERVICING

Confirm that the screws, parts and wiring which were removed in order to service are put in the original positions, or whether there are the portions which are deteriorated around the serviced places serviced or not. Check the insulation between the antenna terminal or external metal and the AC cord plug blades. And be sure the safety of that.

(INSULATION CHECK PROCEDURE)

1. Unplug the plug from the AC outlet.
2. Remove the antenna terminal on TV and turn on the TV.
3. Insulation resistance between the cord plug terminals and the eternal exposure metal [Note 2] should be more than 1M ohm by using the 500V insulation resistance meter [Note 1].
4. If the insulation resistance is less than 1M ohm, the inspection repair should be required.

[Note 1]

If you have not the 500V insulation resistance meter, use a Tester.

[Note 2]

External exposure metal: Antenna terminal

HOW TO ORDER PARTS

Please include the following informations when you order parts. (Particularly the VERSION LETTER.)

1. MODEL NUMBER and VERSION LETTER
   The MODEL NUMBER can be found on the back of each product and the VERSION LETTER can be found at the end of the SERIAL NUMBER.
2. PART NO. and DESCRIPTION
   You can find it in your SERVICE MANUAL.

IMPORTANT

Inferior silicon grease can damage IC's and transistors.
When replacing an IC's or transistors, use only specified silicon grease (YG6260M).
Remove all old silicon before applying new silicon.

GENERAL SPECIFICATIONS

G-1	**TV System**	CRT		CRT Size / Visual Size	19 inch / 480.0mmV
				CRT Type	Normal
				Deflection	90 degree
				Magnetic Field BV/BH	+0.45G/0.18G
		Color System			NTSC
		Speaker			1Speaker
				Position	Bottom
				Size	3 Inch
				Impedance	8 ohm
		Sound Output		MAX	1.5 W
				10%(Typical)	1.0 W
		NTSC3.58+4.43 /PAL60Hz			No
G-2	**Tuning System**	Broadcasting System			US System M
		Tuner and Receive CH		System	1Tuner
				Destination	Ohers
				Tuning System	F-Synth
				Input Impedance	VHF/UHF 75 ohm
				CH Coverage	2 - 69, 4A, A-5 - A-1, A - I, J - W, W+1 - W+84
		Intermediate Frequency		Picture(FP)	45.75MHz
				Sound(FS)	41.25MHz
				FP-FS	4.50MHz
		Preset CH			No
		Stereo/Dual TV Sound			No
		Tuner Sound Muting			Yes
G-3	**Power**	Power Source		AC	120V AC 60Hz
				DC	
		Power Consumption		at AC	73 W at AC 120 V 60 Hz
				Stand by (at AC)	5 W at AC 120 V 60 Hz
				Per Year	-- kWh/Year
		Protector		Power Fuse	Yes
G-4	**Regulation**			Safety	UL
				Radiation	FCC
				X-Radiation	DHHS
G-5	**Temperature**			Operation	+5oC ~ +40oC
				Storage	-20oC ~ +60oC
G-6	**Operating Humidity**				Less then 80% RH
G-7	**On Screen Display**	Menu			Yes
			Menu Type		Character
			Picture		Yes
				Contrast	Yes
				Brightness	Yes
				Color	Yes
				Tint	Yes
				Sharpness	Yes
			Audio		No
				Bass	No
				Treble	No
				Balance	No
				BBE On/Off	No
				Stable Sound On/Off	No
			CH Set Up		Yes
				TV/CABLE(CATV)	Yes
				Auto CH Memory	Yes
				Add/ Delete	Yes
			Language		Yes
			V-chip		Yes
				CH Label	No
				Favorite CH	No
				Color Stream DVD/DTV	No
			Control Level		Yes
				Volume	Yes
				Brightness	Yes
				Contrast	Yes
				Color	Yes
				Tint (NTSC Only)	Yes
				Sharpness	Yes
				Tuning	No
				Bass	No
				Treble	No
				Balance	No
				Back Light	No
			Stereo,Audio Output,SAP		No
			Video		Yes
			Color Stream		No
			Channel(TV/Cable)		Yes
			CH Label		No
			Sleep Timer		Yes
			Sound Mute		Yes
			V-chip Rating		Yes
G-8	**OSD Language**				English French Spanish
			OSD Language Setting		English

GENERAL SPECIFICATIONS

G-9	**Clock and Timer**	Sleep Timer	Max Time	120 Min
			Step	10 Min
		On/Off Timer	Program(On Tim / Off Tim)	No
		Wake Up Timer		No
		Timer Back-up (at Power Off Mode)	more than	-- Min Sec
G-10	**Remote Control**	Unit		RC-EH
		Glow in Dark Remocon		No
		Format		Toshiba
		Custom Code		40-BF h
		Power Source	Voltage(D.C)	3V
			UM size x pcs	UM-4 x 2 pcs
		Total Keys		27 Keys
		Keys	Power	Yes
			1	Yes
			2	Yes
			3	Yes
			4	Yes
			5	Yes
			6	Yes
			7	Yes
			8	Yes
			9	Yes
			0	Yes
			100	No
			CH Up	Yes
			CH Down	Yes
			Volume Up	Yes
			Volume Down	Yes
			TV/Caption/Text	Yes
			CH1/CH2	Yes
			TV/Video(TV/AV)	Yes
			CH RTN/CH ENT(Quick View)	Yes
			Sleep	Yes
			RE Call(Call)	Yes
			Reset	Yes
			Menu	Yes
			Enter	Yes
			Mute	Yes
			Exit	No
			MTS(Audio Select)	No
			Set +	Yes
			Set -	Yes
		Multi Brand Keys	CH Up(VCR)	No
			CH Down(VCR)	No
			Pause/Still	No
			TV/VCR(VCR)	No
			Code	No
			FF	No
			Rew	No
			Rec	No
			Play	No
			Stop	No
			TV	No
			VCR	No
			Cable	No
G-11	**Features**	Auto Degauss		Yes
		Auto Shut Off		Yes
		Canal+		No
		CATV		Yes
		Anti-theft		No
		Rental		No
		Memory(Last CH)		Yes
		Memory(Last Volume)		Yes
		V-Chip		Yes
			Type	USA,ORION Type
		BBE		No
		Auto Search		No
		CH Allocation		No
		SAP		No
		Channel Lock		No
		Just Clock Function		No
		Game Position		No
		CH Label		No
		VM Circuit		No
		Full OSD		No
		Premiere		No
		Comb Filter		No
				Lines
		Auto CH Memory		Yes
		Hotel Lock		No
		Closed Caption		Yes
		Stable Sound		No
		FBT Leak Test Protect		Yes
		Favorite CH		No

GENERAL SPECIFICATIONS

G-12	**Accessories**	Owner's Manual		Language	English
				W/ Warranty	Yes
		Remote Control Unit			Yes
		Rod Antenna			No
				Poles	
				Terminal	
		Loop Antenna			No
				Terminal	
		U/V Mixer			No
		DC Car Cord (Center+)			No
		Guarantee Card			No
		Warning Sheet			No
		Circuit Diagram			No
		Antenna Change Plug			No
		Service Facility List			No
		Important Safety Instruction			Yes
		Dew/AHC Caution Sheet			No
		AC Plug Adapter			No
		Quick Set-up Sheet			No
		Battery			Yes
				UM size x pcs	UM4 x 2
				OEM Brand	No
		AC Cord			No
		AV Cord (2Pin-1Pin)			No
		Registration Card (NDL Card)			Yes
		ESP Card			Yes
		PTB Sheet			No
		300 ohm to 75 ohm Antenna Adapter			No
G-13	**Interface**	Switch	Front	Power	Yes
				System Select	No
				Main Power SW	No
				Sub Power	No
				Channel Up/Reset	Yes
				Channel Down/Enter	Yes
				Volume Up/Set Up	Yes
				Volume Down/Set Down	Yes
				MENU=Volume Up+Volume Down	Yes
			Rear	AC/DC	No
				TV/CATV Selector	No
				Degauss	No
				Main Power SW	No
		Indicator		Power	Yes
				Stand-by	No
				On Timer	No
		Terminals	Front	Video Input	RCA
				Audio Input	RCA x 1
				Other Terminal	No
			Rear	Video Input(Rear1)	No
				Video Input(Rear2)	No
				Audio Input(Rear1)	No
				Audio Input(Rear2)	No
				Video Output	No
				Audio Output	No
				Euro Scart	No
				Color Stream	No
				Diversity	No
				Ext Speaker	No
				DC Jack 12V(Center +)	No
				VHF/UHF Antenna Input	F Type
				AC Outlet	No
G-14	**Set Size**			Approx. W x D x H (mm)	488 x 465 x 416
G-15	**Weight**			Net (Approx.)	17.5kg (38.6 lbs)
				Gross (Approx.)	20.0kg (44.1lbs)
G-16	**Carton**		Master Carton		No
				Content	---- Sets
				Material	-- /--
				Dimensions W x D x H(mm)	-- x -- x --
				Description of Origin	No
			Gift Box		Yes
				Material	Double/Brown
				Dimensions W x D x H(mm)	546 x 526 x 472
				Design	As per Buyer's
				Description of Origin	Yes
			Drop Test		Natural Dropping At 1 Corner / 3 Edges / 6 Surfaces
				Height (cm)	46
			Container Stuffing		436 Sets/40' container
G-17	**Cabinet Material**			Cabinet Front	PS 94V0 DECABROM
				Cabinet Rear	PS 94V0

DISASSEMBLY INSTRUCTIONS

1. REMOVAL OF ANODE CAP

Read the following **NOTED** items before starting work.

* After turning the power off there might still be a potential voltage that is very dangerous. When removing the Anode Cap, make sure to discharge the Anode Cap's potential voltage.
* Do not use pliers to loosen or tighten the Anode Cap terminal, this may cause the spring to be damaged.

REMOVAL

1. Follow the steps as follows to discharge the Anode Cap. **(Refer to Fig. 1-1.)**
   Connect one end of an Alligator Clip to the metal part of a flat-blade screwdriver and the other end to ground.
   While holding the plastic part of the insulated Screwdriver, touch the support of the Anode with the tip of the Screwdriver.
   A cracking noise will be heard as the voltage is discharged.

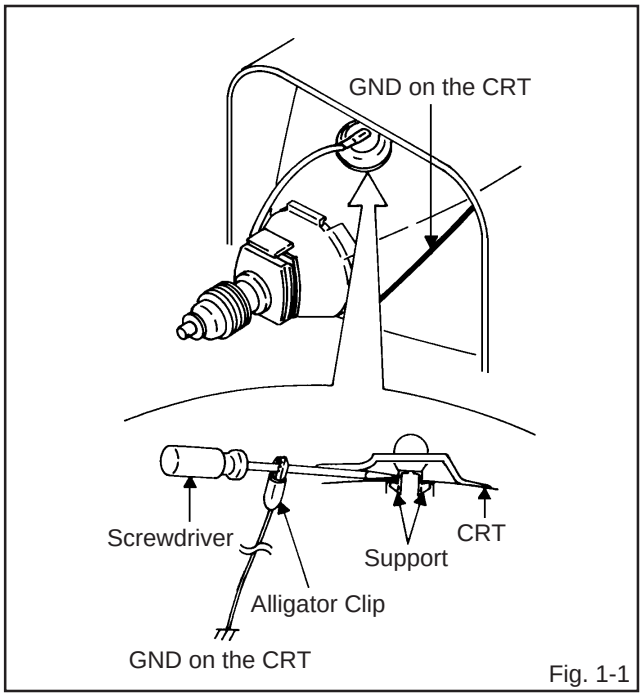

Fig. 1-1

2. Flip up the sides of the Rubber Cap in the direction of the arrow and remove one side of the support. **(Refer to Fig. 1-2.)**

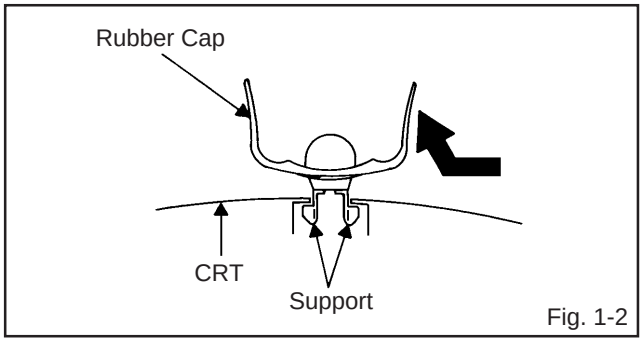

Fig. 1-2

3. After one side is removed, pull in the opposite direction to remove the other.

NOTE

Take care not to damage the Rubber Cap.

INSTALLATION

1. Clean the spot where the cap was located with a small amount of alcohol. **(Refer to Fig. 1-3.)**

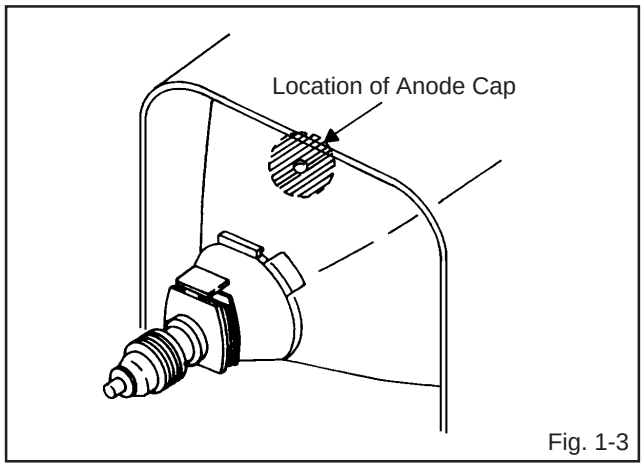

Fig. 1-3

NOTE

Confirm that there is no dirt, dust, etc. at the spot where the cap was located.

2. Arrange the wire of the Anode Cap and make sure the wire is not twisted.
3. Turn over the Rubber Cap. **(Refer to Fig. 1-4.)**

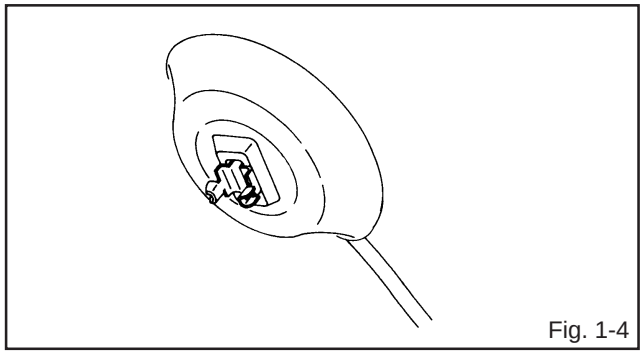
Fig. 1-4

4. Insert one end of the Anode Support into the anode button, then the other as shown in **Fig. 1-5**.

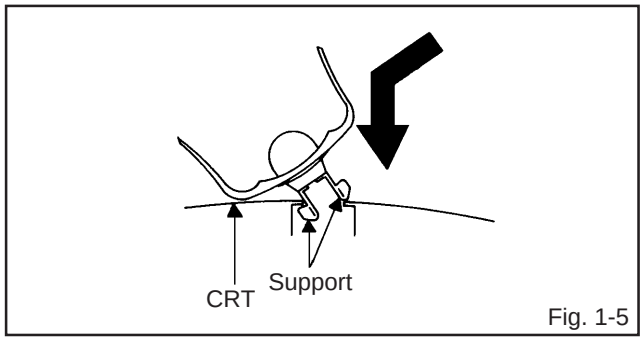

Fig. 1-5

5. Confirm that the Support is securely connected.
6. Put on the Rubber Cap without moving any parts.

DISASSEMBLY INSTRUCTIONS

2. REMOVAL AND INSTALLATION OF FLAT PACKAGE IC

REMOVAL

1. Put the Masking Tape (cotton tape) around the Flat Package IC to protect other parts from any damage. **(Refer to Fig. 2-1.)**

   NOTE

   Masking is carried out on all the parts located within 10 mm distance from IC leads.

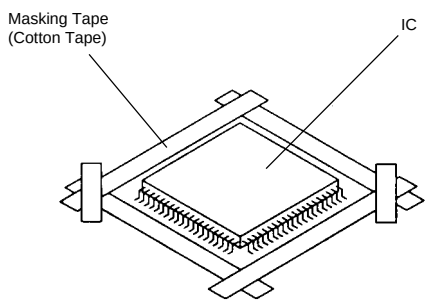

Fig. 2-1

2. Heat the IC leads using a blower type IC desoldering machine. **(Refer to Fig. 2-2.)**

   NOTE

   Do not add the rotating and the back and forth directions force on the IC, until IC can move back and forth easily after desoldering the IC leads completely.

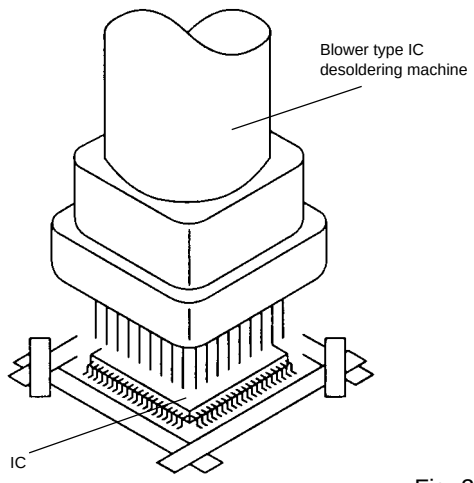

Fig. 2-2

3. When IC starts moving back and forth easily after desoldering completely, pickup the corner of the IC using a tweezers and remove the IC by moving with the IC desoldering machine. **(Refer to Fig. 2-3.)**

   NOTE

   Some ICs on the PCB are affixed with glue, so be careful not to break or damage the foil of each IC leads or solder lands under the IC when removing it.

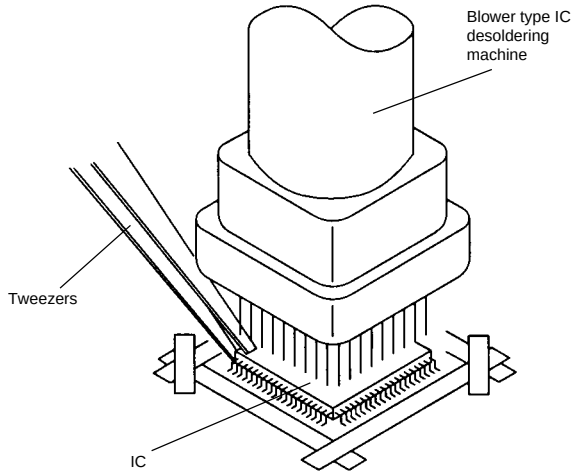

Fig. 2-3

4. Peel off the Masking Tape.

5. Absorb the solder left on the pattern using the Braided Shield Wire. **(Refer to Fig. 2-4.)**

   NOTE

   Do not move the Braided Shield Wire in the vertical direction towards the IC pattern.

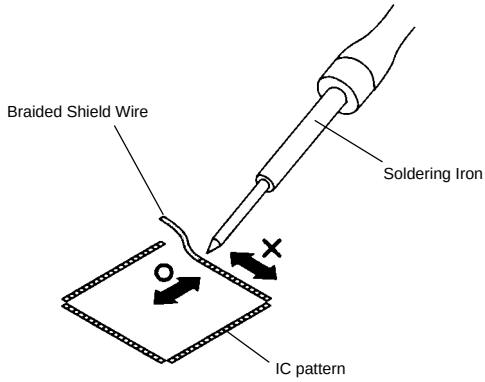

Fig. 2-4

DISASSEMBLY INSTRUCTIONS

INSTALLATION

1. Take care of the polarity of new IC and then install the new IC fitting on the printed circuit pattern. Then solder each lead on the diagonal positions of IC temporarily. **(Refer to Fig. 2-5.)**

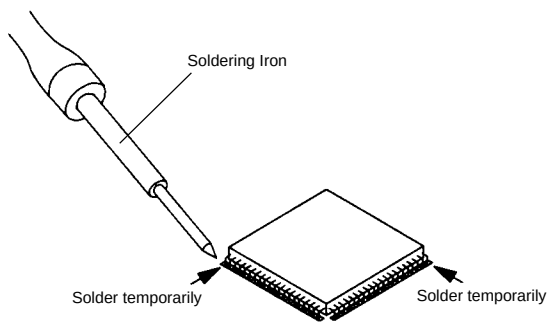

Fig. 2-5

2. Supply the solder from the upper position of IC leads sliding to the lower position of the IC leads. **(Refer to Fig. 2-6.)**

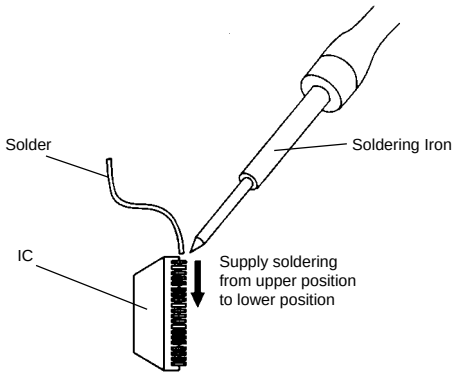

Fig. 2-6

3. Absorb the solder left on the lead using the Braided Shield Wire. **(Refer to Fig. 2-7.)**

   NOTE

   Do not absorb the solder to excess.

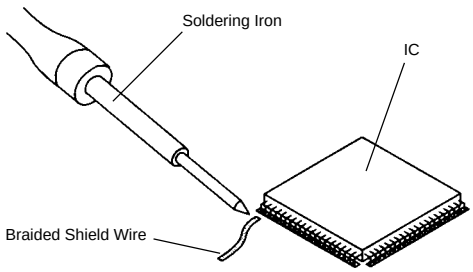

Fig. 2-7

4. When bridge-soldering between terminals and/or the soldering amount are not enough, resolder using a Thin-tip Soldering Iron. **(Refer to Fig. 2-8.)**

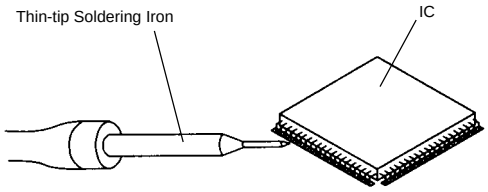

Fig. 2-8

5. Finally, confirm the soldering status on four sides of the IC using a magnifying glass.
   Confirm that no abnormality is found on the soldering position and installation position of the parts around the IC. If some abnormality is found, correct by resoldering.

   NOTE

   When the IC leads are bent during soldering and/or repairing, do not repair the bending of leads. If the bending of leads are repaired, the pattern may be damaged. So, be always sure to replace the IC in this case.

SERVICE MODE LIST

This unit provided with the following SERVICE MODES so you can repair, examine and adjust easily.
To enter the Service Mode, press both set key and remote control key for more than 1 second.

Set Key	Remocon Key	Operations
VOL. (-) MIN	0	Releasing of V-CHIP PASSWORD.
VOL. (-) MIN	1	Initialization of the factory. NOTE: Do not use this for the normal servicing.
VOL. (-) MIN	6	POWER ON total hours is displayed on the screen. Refer to the "CONFIRMATION OF USING HOURS". Can be checked of the INITIAL DATA of MEMORY IC. Refer to the "NOTE FOR THE REPLACING OF MEMORY IC".
VOL. (-) MIN	8	Writing of EEPROM initial data. NOTE: Do not use this for the normal servicing.
VOL. (-) MIN	9	Display of the Adjustment MENU on the screen. Refer to the "ELECTRICAL ADJUSTMENT" (On-Screen Display Adjustment).

CONFIRMATION OF USING HOURS

POWER ON total hours can be checked on the screen. Total hours are displayed in 16 system of notation.

1. Set the VOLUME to minimum.
2. Press both VOL. DOWN button on the set and Channel button **(6)** on the remote control for more than 1 second.
3. After the confirmation of using hours, turn off the power.

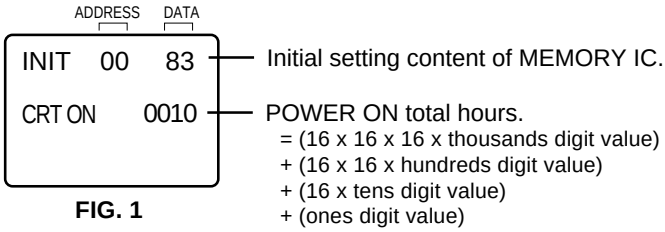

FIG. 1

NOTE FOR THE REPLACING OF MEMORY IC

If a service repair is undertaken where it has been required to change the MEMORY IC, the following steps should be taken to ensure correct data settings while making reference to TABLE 1.

INI	+0	+1	+2	+3	+4	+5	+6	+7	+8	+9	+A	+B
00	88	09	A2	01	06	63	24	09	29	20	FF	03

Table 1

1. Enter DATA SET mode by setting VOLUME to minimum.
2. Press both VOL. DOWN button on the set and Channel button **(6)** on the remote control for more than 1 second. ADDRESS and DATA should appear as FIG 1.
3. ADDRESS is now selected and should "blink". Using the SET + or - keys on the remote, step through the ADDRESS until required ADDRESS to be changed is reached.
4. Press ENTER to select DATA. When DATA is selected, it will "blink".
5. Again, step through the DATA using SET + or - until required DATA value has been selected.
6. Pressing ENTER will take you back to ADDRESS for further selection if necessary.
7. Repeat steps 3 to 6 until all data has been checked.
8. When satisfied correct DATA has been entered, turn POWER off (return to STANDBY MODE) to finish DATA input.

The unit will now have the correct DATA for the new MEMORY IC.

ELECTRICAL ADJUSTMENTS

1. BEFORE MAKING ELECTRICAL ADJUSTMENTS

Read and perform these adjustments when repairing the circuits or replacing electrical parts or PCB assemblies.

CAUTION

- Use an isolation transformer when performing any service on this chassis.
- Before removing the anode cap, discharge electricity because it contains high voltage.
- When removing a PCB or related component, after unfastening or changing a wire, be sure to put the wire back in its original position.
  Inferior silicon grease can damage IC's and transistors.
- When replacing IC's and transistors, use only specified silicon grease.
  Remove all old silicon before applying new silicon.

Prepare the following measurement tools for electrical adjustments.

1. Oscilloscope
2. Digital Voltmeter

On-Screen Display Adjustment

1. In the condition of NO indication on the screen.
   Press the VOL. DOWN button on the set and the Channel button **(9)** on the remote control for more than 1 second to appear the adjustment mode on the screen as shown in **Fig. 1-1**.

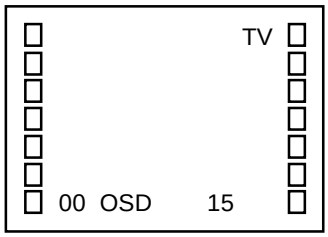

Fig. 1-1

2. Use the Channel UP/DOWN button or Channel button **(1-10)** on the remote control to select the options shown in **Fig. 1-2**.
3. Press the MENU button on the remote control to end the adjustments.

NO.	FUNCTION	NO.	FUNCTION
00	OSD H	13	BRIGHTNESS
01	CUT OFF	14	CONTRAST
02	RF AGC DELAY	15	COLOR
03	VIF VCO	16	TINT
04	H VCO	17	SHARPNESS
05	H PHASE	18	FM LEVEL
06	V SIZE	19	LEVEL
07	V SHIFT	20	SEPARATION 1
08	R DRIVE	21	SEPARATION 2
09	B DRIVE	22	TEST MONO
10	R BIAS	23	TEST STEREO
11	G BIAS	24	X-RAY TEST
12	B BIAS		

Fig. 1-2

2. BASIC ADJUSTMENTS

2-1: RF AGC DELAY

1. Place the set with Aging Test for more than 15 minutes.
2. Receive a 63dB monoscope pattern.
3. Connect the digital voltmeter to **R606**.
4. Activate the adjustment mode display of **Fig. 1-1** and press the channel button **(02)** on the remote control to select "RF AGC DELAY".
5. Press the VOL. UP/DOWN button on the remote control until the digital voltmeter is 2.9 ± 0.1V.

2-2: CUT OFF

1. Adjust the unit to the following settings.
   R.DRIVE=10, B.DRIVE=10, R.BIAS=64, G.BIAS=64, B.BIAS=64, BRIGHTNESS=130, CONTRAST=100.
2. Place the set with Aging Test for more than 15 minutes.
3. Activate the adjustment mode display of **Fig. 1-1** and press the channel button **(01)** on the remote control to select "CUT OFF".
4. Adjust the **Screen Volume** until a dim raster is obtained.

2-3: FOCUS

1. Receive the monoscope pattern.
2. Turn the Focus Volume fully counterclockwise once.
3. Adjust the **Focus Volume** until picture is distinct.

2-4: WHITE BALANCE

NOTE: Adjust after performing CUT OFF adjustment.

1. Place the set with Aging Test for more than 10 minutes.
2. Receive the white 100% signal from the Pattern Generator.
3. Using the adjustment control, set the brightness and contrast to normal position.
4. Activate the adjustment mode display of **Fig. 1-1** and press the channel button **(10)** on the remote control to select "R.BIAS".
5. Using the VOL. UP/DOWN button on the remote control, adjust the R.BIAS.
6. Press the CH. UP/DOWN button on the remote control to select the "R.DRIVE", "B.DRIVE", "G.BIAS" or "B.BIAS".
7. Using the VOL. UP/DOWN button on the remote control, adjust the R.DRIVE, B.DRIVE, G.BIAS or B.BIAS.
8. Perform the above adjustments 6 and 7 until the white color is looked like a white.

2-5: SUB TINT/SUB COLOR

1. Receive the color bar pattern. (RF Input)
2. Connect the oscilloscope to **TP023**.
3. Activate the adjustment mode display of **Fig. 1-1** and press the channel button **(16)** on the remote control to select "TINT".
4. Press the VOL. UP/DOWN button on the remote control until the section "A" becomes a straight line **(Refer Fig. 2-1)**.
5. Connect the oscilloscope to **TP022**.
6. Press the CH DOWN button once to set to "COLOR" mode.
7. Press the VOL. UP/DOWN button on the remote control until the red color level is adjusted to 120% of the white level. **(Refer to Fig. 2-2)**
8. Receive the color bar pattern. (Audio Video Input)
9. Press the TV/AV button on the remote control to set to the AV mode. Then perform the above adjustments 2~7.

ELECTRICAL ADJUSTMENTS

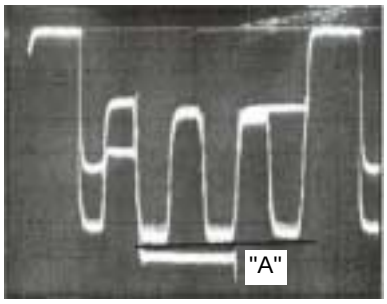

Fig. 2-1

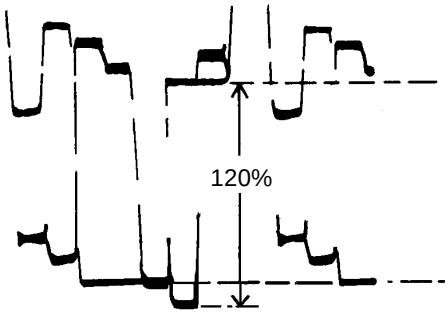

Fig. 2-2

2-6: HORIZONTAL PHASE

1. Receive the center cross signal from the Pattern Generator.
2. Activate the adjustment mode display of **Fig. 1-1** and press the channel button **(05)** on the remote control to select "H PHASE".
3. Press the VOL. UP/DOWN button on the remote control until the SHIFT quantity of the OVER SCAN on right and left becomes minimum.

2-7: VERTICAL SIZE

NOTE: Adjust after performing adjustments in section 2-6.

1. Receive the crosshatch signal from the Pattern Generator.
2. Activate the adjustment mode display of **Fig. 1-1** and press the channel button **(06)** on the remote control to select "V SIZE".
3. Press the VOL. UP/DOWN button on the remote control until the rectangle on the center of the screen becomes square.
4. Receive a broadcast and check if the picture is normal.

2-8: VERTICAL SHIFT

NOTE: Adjust after performing adjustments in section 2-7.

1. Receive the crosshatch signal from the Pattern Generator.
2. Activate the adjustment mode display of **Fig. 1-1** and press the channel button **(07)** on the remote control to select "V SHIFT".
3. Press the VOL. UP/DOWN button on the remote control until the horizontal line becomes fit to the notch of the shadow mask.

2-9: OSD HORIZONTAL

1. Activate the adjustment mode display of **Fig. 1-1**.
2. Press the VOL. UP/DOWN button on the remote control until the difference of A and B becomes minimum. **(Refer to Fig. 2-3)**

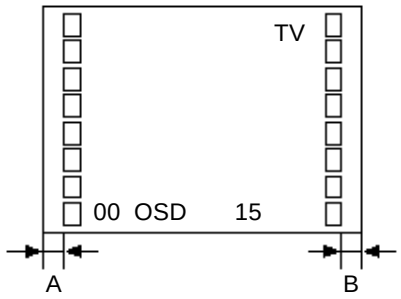

Fig. 2-3

2-10: VIF VCO

1. Place the set with Aging Test for more than 10 minutes.
2. Receive an 80dB monoscope pattern.
3. Connect the digital voltmeter between the **pin 5 of CP601** and the **GND**.
4. Activate the adjustment mode display of **Fig. 1-1** and press the channel button **(03)** on the remote control to select "VIF VCO".
5. Press the VOL. UP/DOWN button on the remote control until the digital voltmeter is 2.5V.

2-11: SUB CONTRAST MANUAL

1. Receive a 70dB the color bar pattern. (RF Input)
2. Activate the adjustment mode display of **Fig. 1-1** press the channel button **(14)** on the remote control to select "CONTRAST".
3. Press the VOL. UP/DOWN button on the remote control until the contrast step No. becomes "100".
4. Receive a 70db the color bar pattern. (Audio Video Input)
5. Press the TV/VIDEO button on the remote control to set to the AV mode. Then perform the above adjustments 2~3.

2-12: BRIGHTNESS

1. Activate the adjustment mode display of **Fig. 1-1** and press the channel button **(13)** on the remote control to select "BRIGHTNESS".
2. Press the VOL. UP/DOWN button on the remote control until the brightness step No. becomes "136".
3. Press the TV/VIDEO button on the remote control to set to the AV mode. Then perform the above adjustments 1~2.
4. Press the TV/VIDEO button on the remote control to set to the CS mode. Then perform the above adjustments 1~2.

ELECTRICAL ADJUSTMENTS

3. PURITY AND CONVERGENCE ADJUSTMENTS

NOTE

1. Turn the unit on and let it warm up for at least 30 minutes before performing the following adjustments.
2. Place the CRT surface facing east or west to reduce the terrestrial magnetism.
3. Turn ON the unit and demagnetize with a Degauss Coil.

3-1: STATIC CONVERGENCE (ROUGH ADJUSTMENT)

1. Tighten the screw for the magnet. Refer to the adjusted CRT for the position. **(Refer to Fig. 3-1)**
   If the deflection yoke and magnet are in one body, untighten the screw for the body.
2. Receive the green raster pattern from the color bar generator.
3. Slide the deflection yoke until it touches the funnel side of the CRT.
4. Adjust center of screen to green, with red and blue on the sides, using the pair of purity magnets.
5. Switch the color bar generator from the green raster pattern to the crosshatch pattern.
6. Combine red and blue of the 3 color crosshatch pattern on the center of the screen by adjusting the pair of 4 pole magnets.
7. Combine red/blue (magenta) and green by adjusting the pair of 6 pole magnets.
8. Adjust the crosshatch pattern to change to white by repeating steps 6 and 7.

3-2: PURITY

NOTE

Adjust after performing adjustments in section 3-1.

1. Receive the green raster pattern from color bar generator.
2. Adjust the pair of purity magnets to center the color on the screen.
   Adjust the pair of purity magnets so the color at the ends are equally wide.
3. Move the deflection yoke backward (to neck side) slowly, and stop it at the position when the whole screen is green.
4. Confirm red and blue colors.
5. Adjust the slant of the deflection yoke while watching the screen, then tighten the fixing screw.

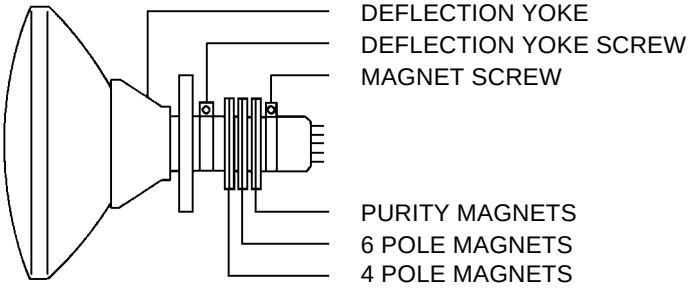

Fig. 3-1

3-3: STATIC CONVERGENCE

NOTE

Adjust after performing adjustments in section 3-2.

1. Receive the crosshatch pattern from the color bar generator.
2. Combine red and blue of the 3 color crosshatch pattern on the center of the screen by adjusting the pair of 4 pole magnets.
3. Combine red/blue (magenta) and green by adjusting the pair of 6 pole magnets.

3-4: DYNAMIC CONVERGENCE

NOTE

Adjust after performing adjustments in section 3-3.

1. Adjust the differences around the screen by moving the deflection yoke upward/downward and right/left. (Refer to Fig. 3-2-a)
2. Insert three wedges between the deflection yoke and CRT funnel to fix the deflection yoke. (Refer to Fig. 3-2-b)

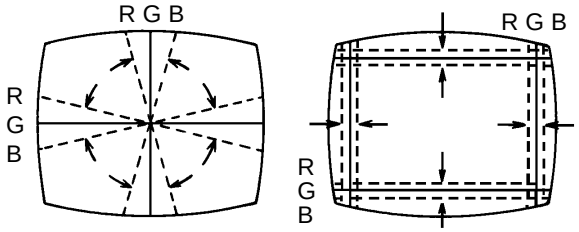

UPWARD/DOWNWARD SLANT RIGHT/LEFT SLANT

Fig. 3-2-a

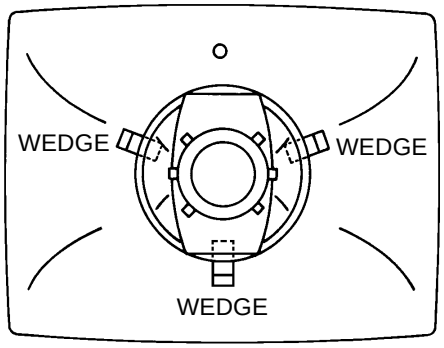

WEDGE POSITION

Fig. 3-2-b

MAJOR COMPONENTS LOCATION GUIDE

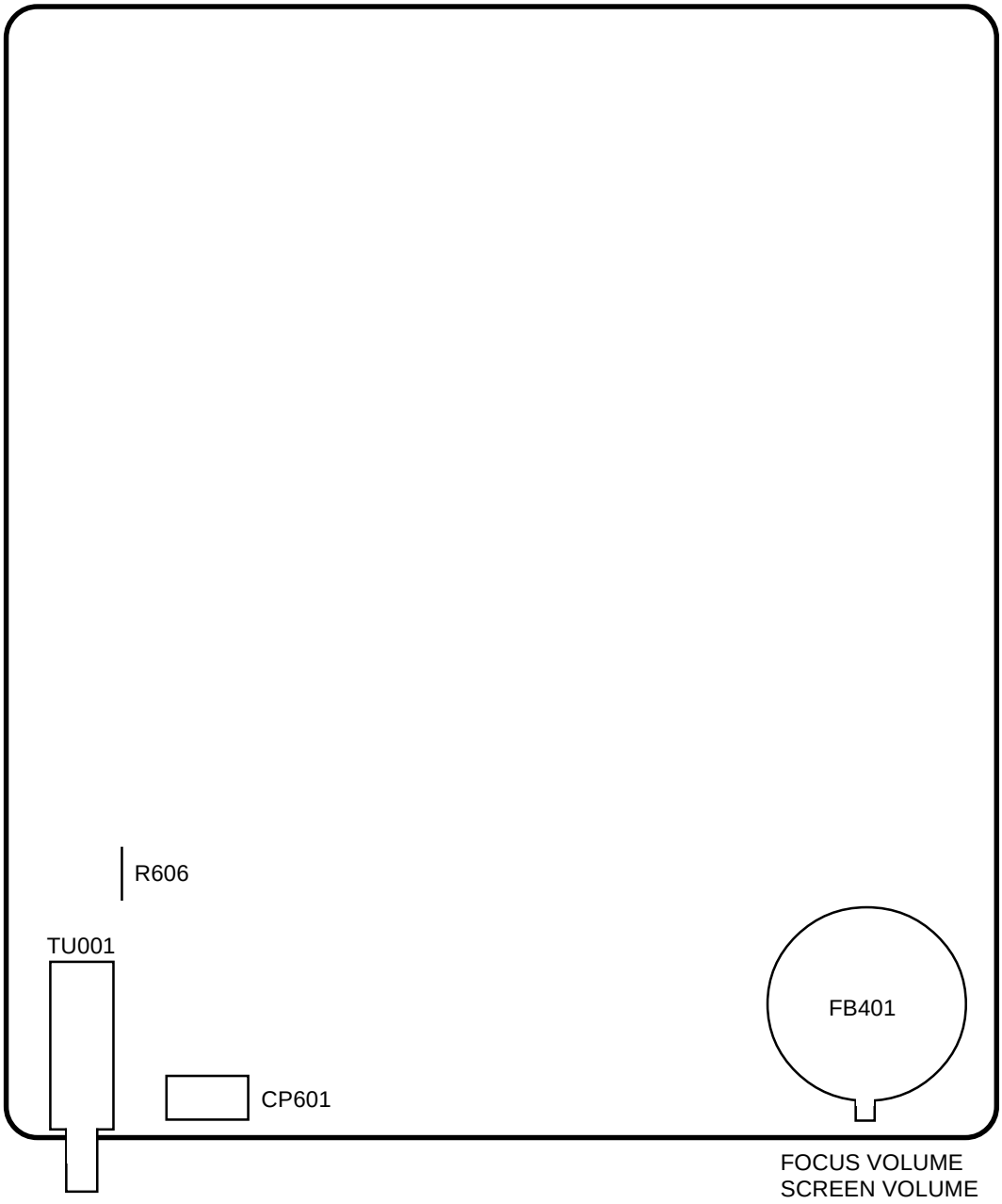

MAIN PCB

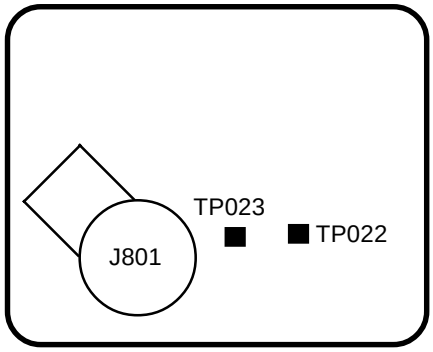

CRT PCB

BLOCK DIAGRAM

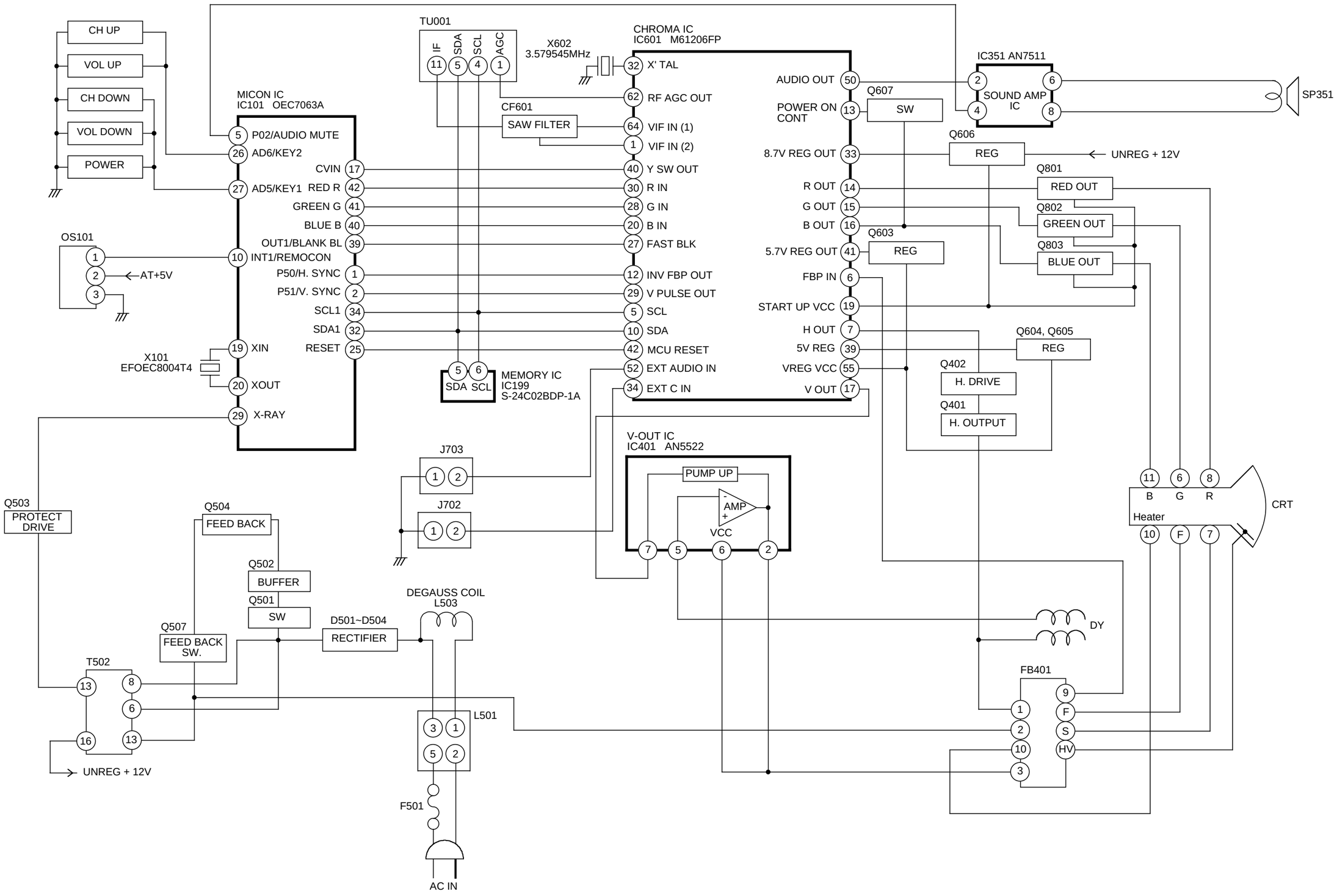

PRINTED CIRCUIT BOARDS
MAIN/CRT (INSERTED PARTS)
SOLDER SIDE

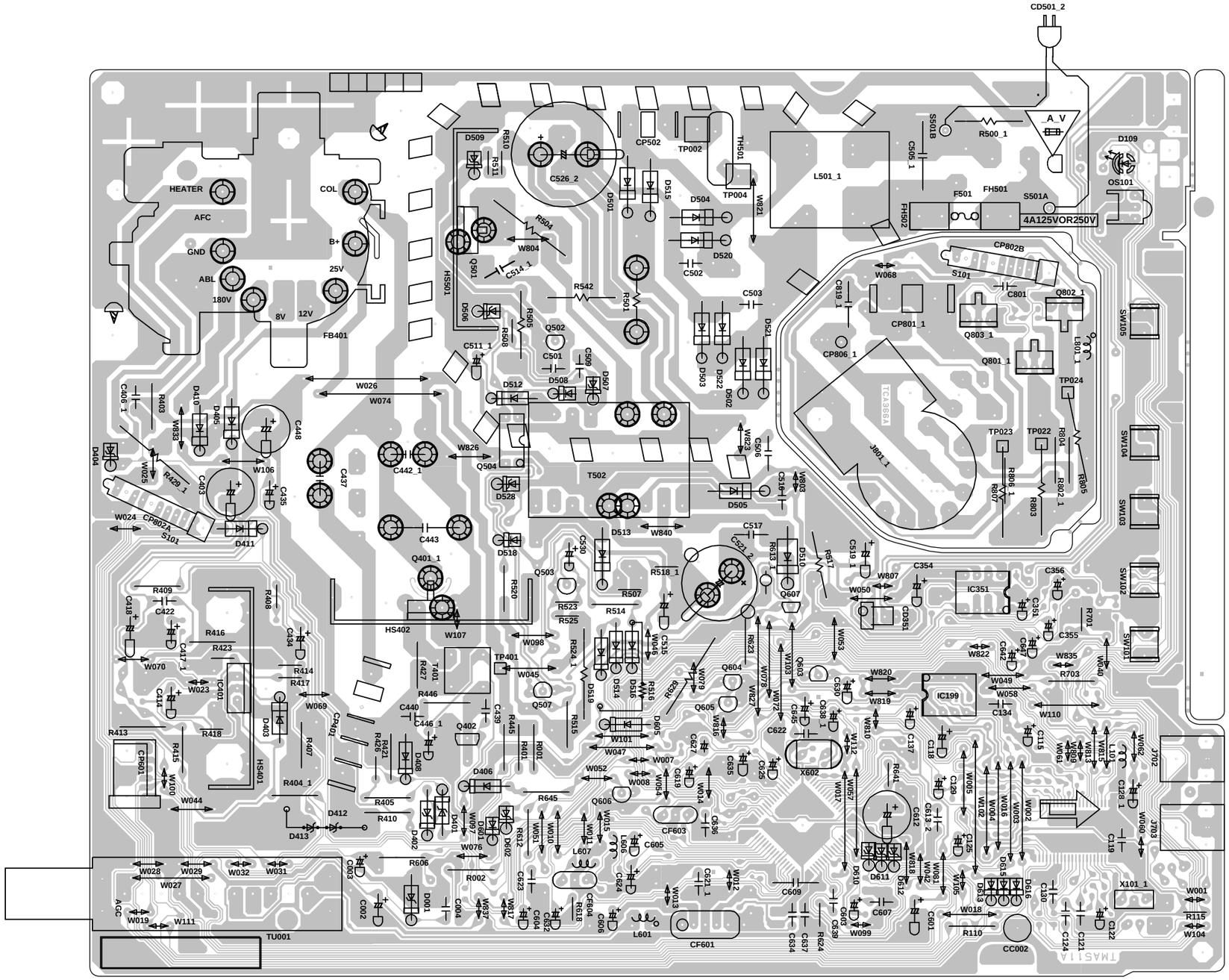

PRINTED CIRCUIT BOARDS
MAIN/CRT (CHIP MOUNTED PARTS)
SOLDER SIDE

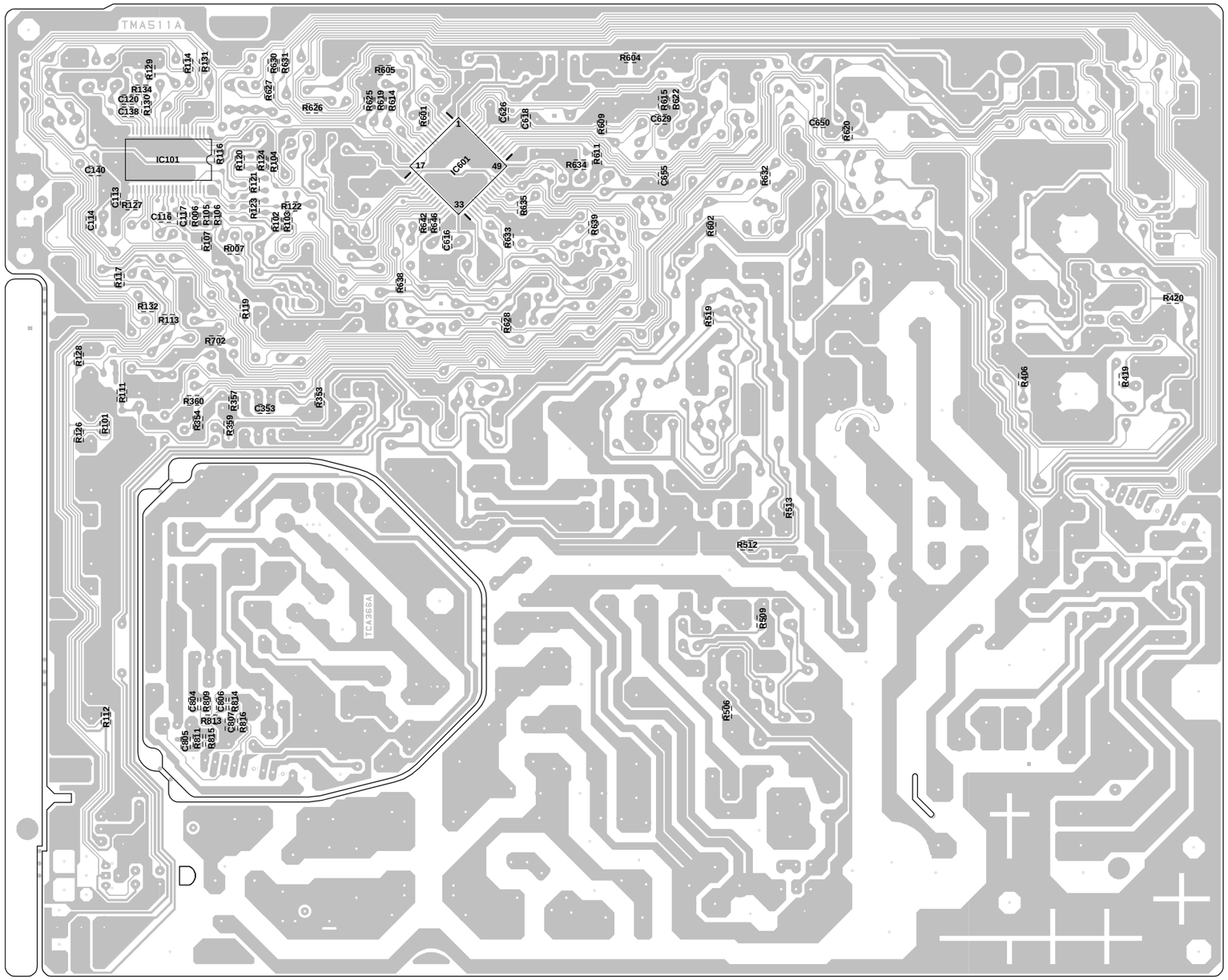

MICON/TUNER SCHEMATIC DIAGRAM
(MAIN PCB)

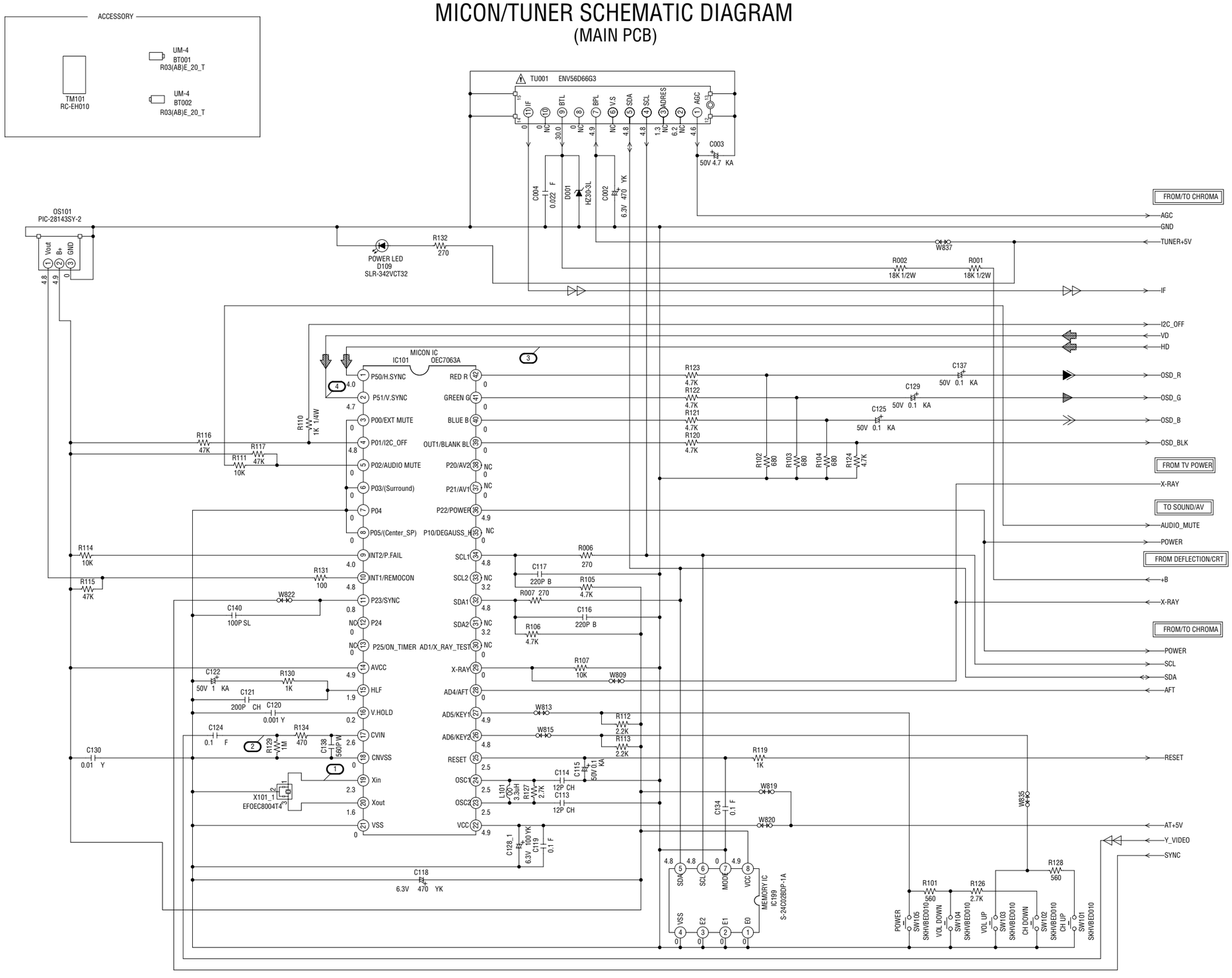

NOTE: THIS SCHEMATIC DIAGRAM IS THE LATEST AT THE TIME OF PRINTING AND SUBJECT TO CHANGE WITHOUT NOTICE。

NOTE: THE DC VOLTAGE AT EACH PART WAS MEASURED WITH THE DIGITAL TESTER WHEN THE COLOR BROADCAST WAS RECEIVED IN GOOD CONDITION AND PICTURE IS NORMAL.

CAUTION: SINCE THESE PARTS MARKED BY ⚠ ARE CRITICAL FOR SAFETY,USE ONES DESCRIBED IN PARTS LIST ONLY 。

ATTENTION: LES PIECES REPAREES PAR UN ⚠ ETANT DANGEREUSES AN POINT DE VUE SECURITE N'UTILISER QUE CELLS DECRITES DANS LA NOMENCLATURE DES PIECES。

DEFLECTION SIGNAL
TUNER VIDEO SIGNAL
R.SIGNAL
G.SIGNAL
B.SIGNAL

CHROMA SCHEMATIC DIAGRAM
(MAIN PCB)

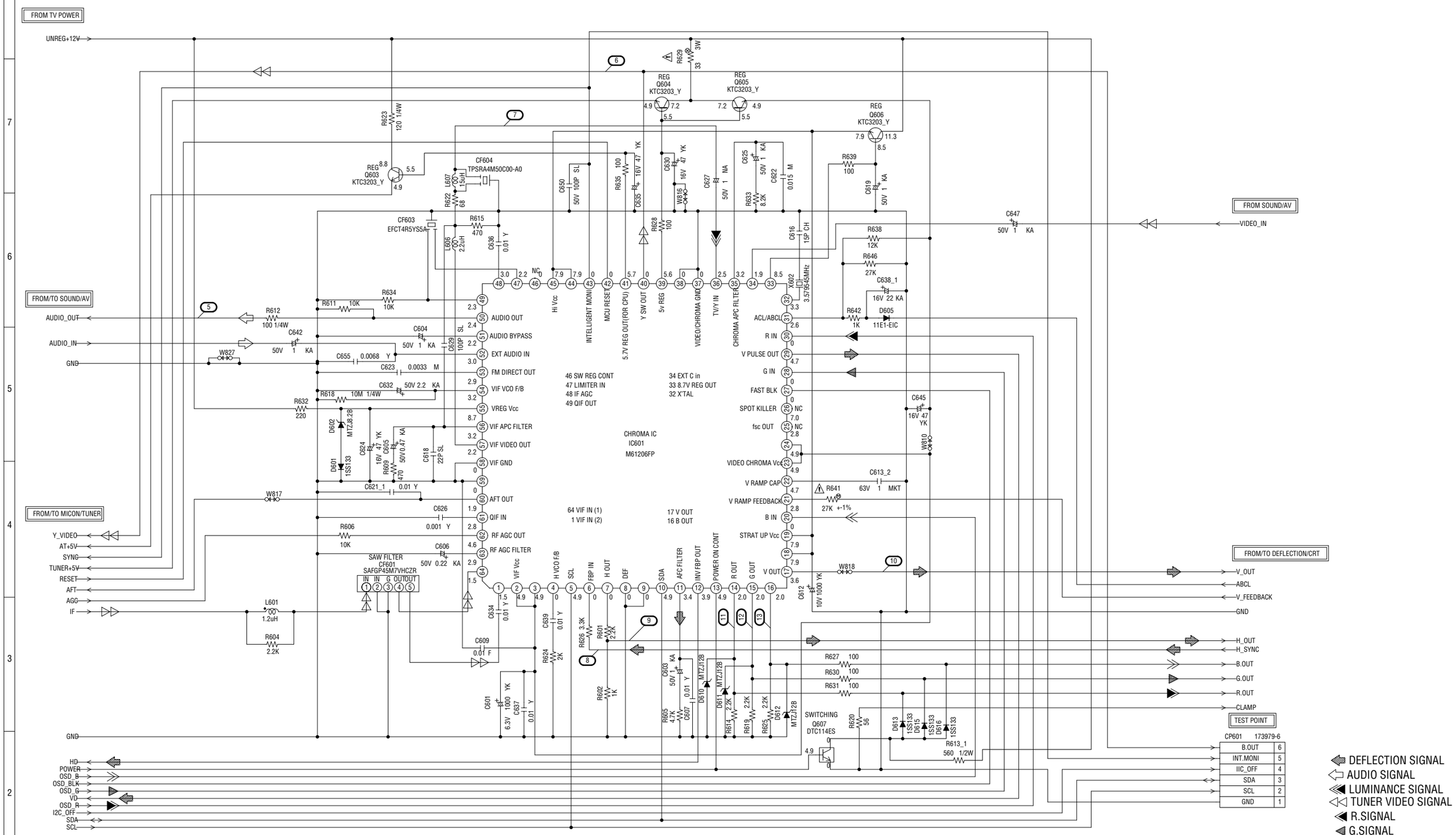

NOTE: THIS SCHEMATIC DIAGRAM IS THE LATEST AT THE TIME OF PRINTING AND SUBJECT TO CHANGE WITHOUT NOTICE。

NOTE: THE DC VOLTAGE AT EACH PART WAS MEASURED WITH THE DIGITAL TESTER WHEN THE COLOR BROADCAST WAS RECEIVED IN GOOD CONDITION AND PICTURE IS NORMAL.

CAUTION: SINCE THESE PARTS MARKED BY ⚠ ARE CRITICAL FOR SAFETY,USE ONES DESCRIBED IN PARTS LIST ONLY 。

ATTENTION: LES PIECES REPAREES PAR UN ⚠ ETANT DANGEREUSES AN POINT DE VUE SECURITE N'UTILISER QUE CELLS DECRITES DANS LA NOMENCLATURE DES PIECES。

CAUTION: DIGITAL TRANSISTOR

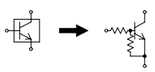

TV POWER SCHEMATIC DIAGRAM
(MAIN PCB)

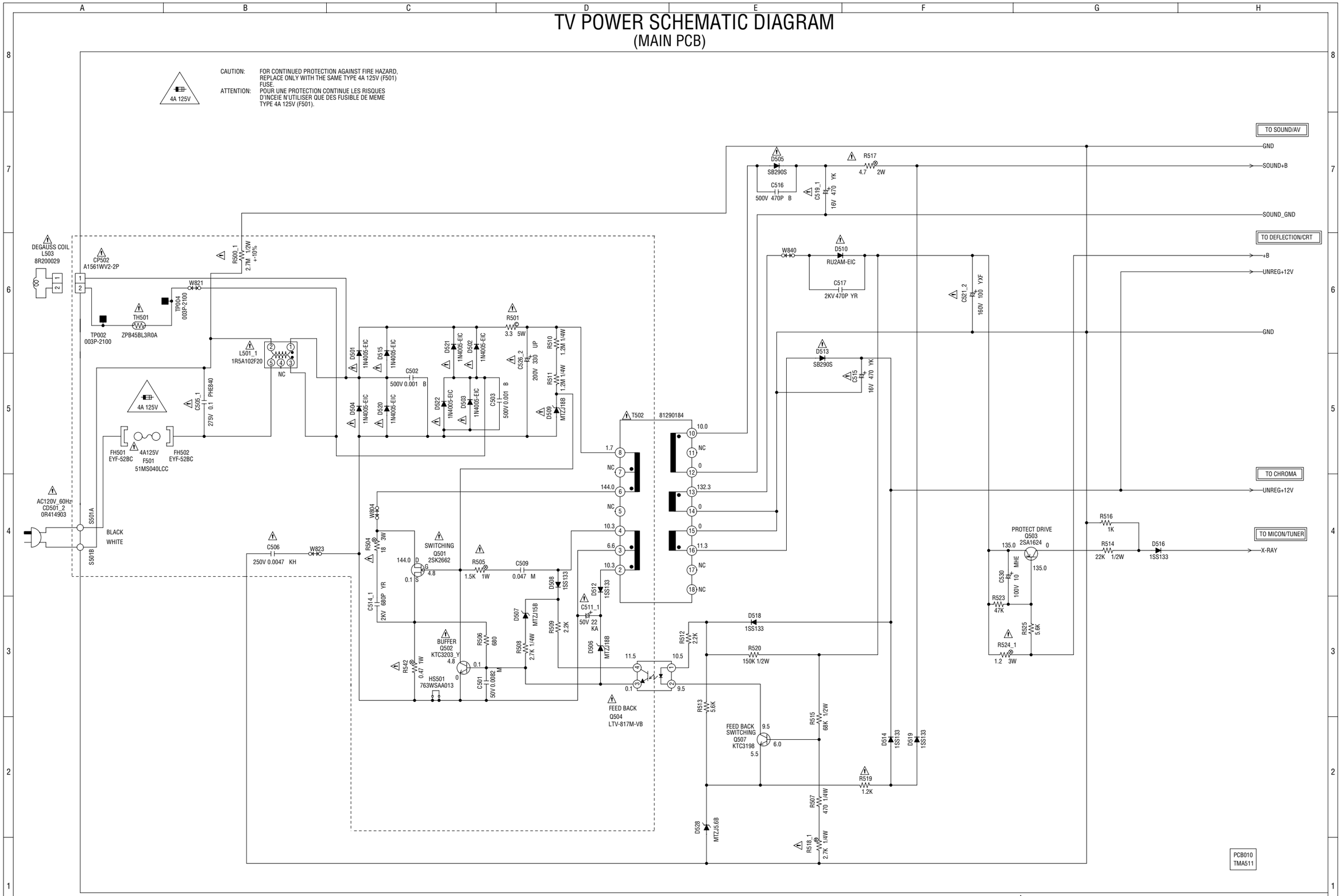

NOTE: THIS SCHEMATIC DIAGRAM IS THE LATEST AT THE TIME OF PRINTING AND SUBJECT TO CHANGE WITHOUT NOTICE。

NOTE: THE DC VOLTAGE AT EACH PART WAS MEASURED WITH THE DIGITAL TESTER WHEN THE COLOR BROADCAST WAS RECEIVED IN GOOD CONDITION AND PICTURE IS NORMAL.

CAUTION: SINCE THESE PARTS MARKED BY ⚠ ARE CRITICAL FOR SAFETY,USE ONES DESCRIBED IN PARTS LIST ONLY 。

ATTENTION: LES PIECES REPAREES PAR UN ⚠ ETANT DANGEREUSES AN POINT DE VUE SECURITE N'UTILISER QUE CELLS DECRITES DANS LA NOMENCLATURE DES PIECES。

DEFLECTION/CRT SCHEMATIC DIAGRAM (MAIN PCB)

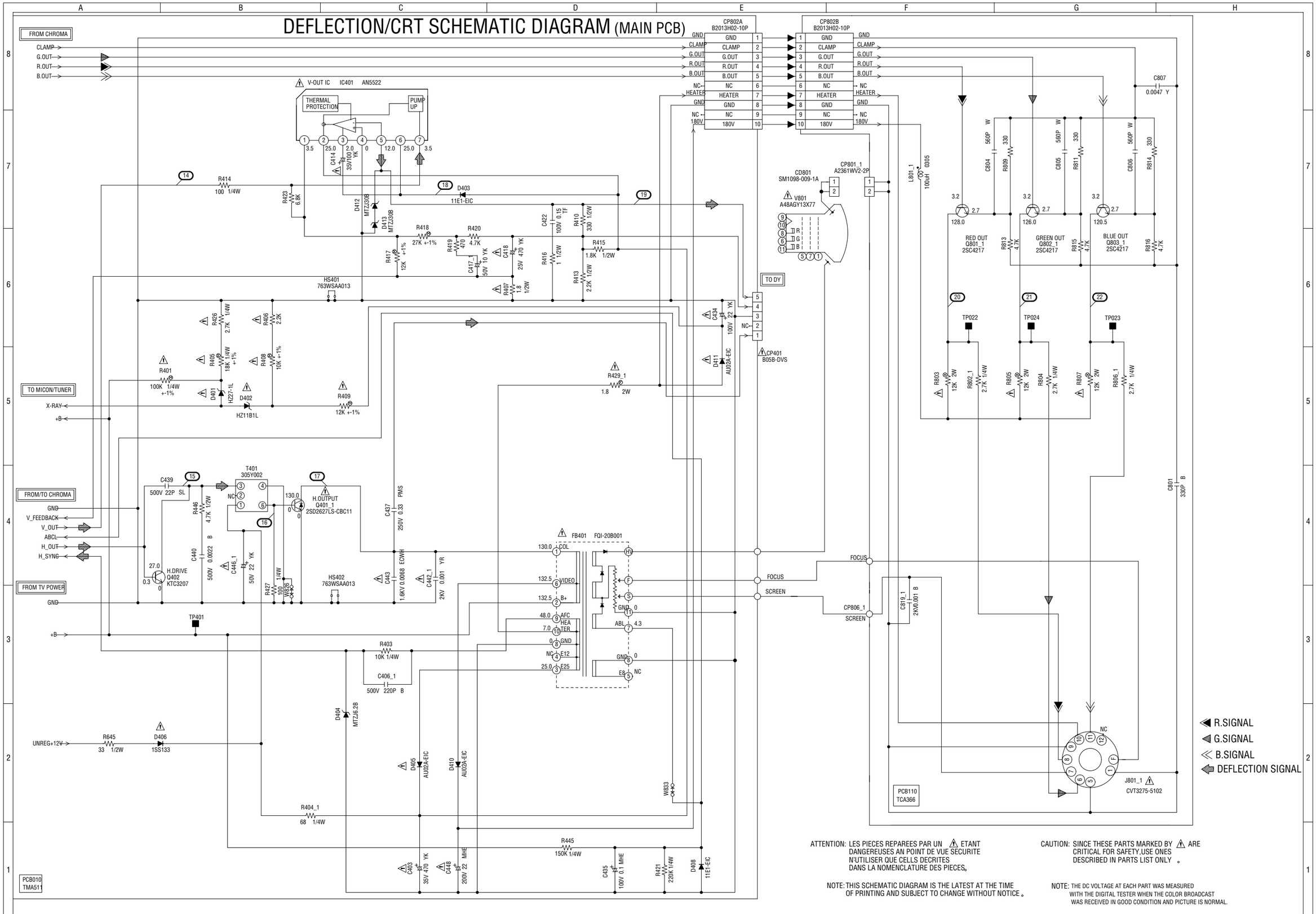

ATTENTION: LES PIECES REPAREES PAR UN ⚠ ETANT DANGEREUSES AN POINT DE VUE SECURITE N'UTILISER QUE CELLS DECRITES DANS LA NOMENCLATURE DES PIECES。

NOTE: THIS SCHEMATIC DIAGRAM IS THE LATEST AT THE TIME OF PRINTING AND SUBJECT TO CHANGE WITHOUT NOTICE 。

CAUTION: SINCE THESE PARTS MARKED BY ⚠ ARE CRITICAL FOR SAFETY,USE ONES DESCRIBED IN PARTS LIST ONLY 。

NOTE: THE DC VOLTAGE AT EACH PART WAS MEASURED WITH THE DIGITAL TESTER WHEN THE COLOR BROADCAST WAS RECEIVED IN GOOD CONDITION AND PICTURE IS NORMAL.

SOUND/AV SCHEMATIC DIAGRAM
(MAIN PCB)

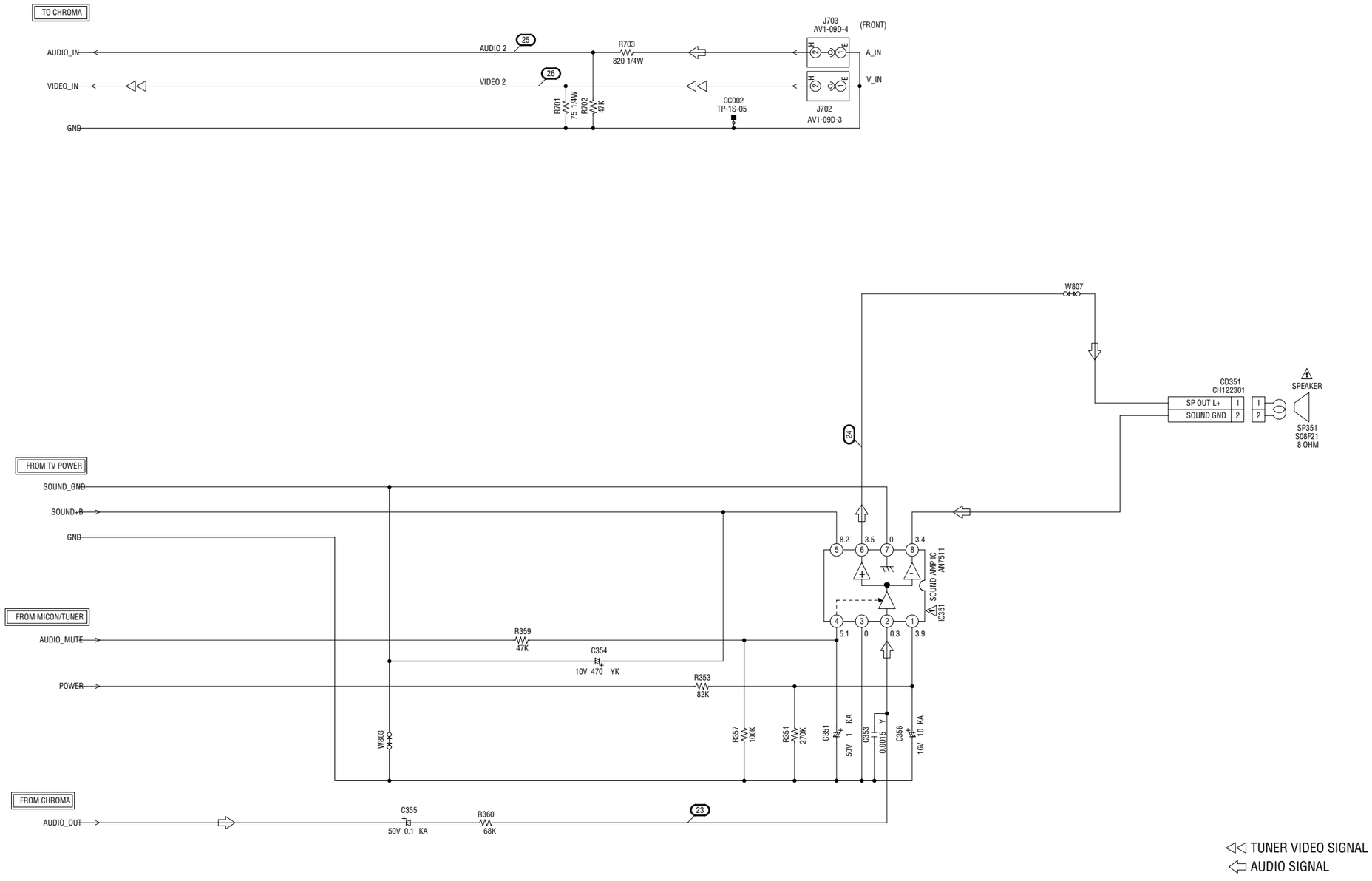

NOTE: THE DC VOLTAGE AT EACH PART WAS MEASURED WITH THE DIGITAL TESTER WHEN THE COLOR BROADCAST WAS RECEIVED IN GOOD CONDITION AND PICTURE IS NORMAL.

NOTE: THIS SCHEMATIC DIAGRAM IS THE LATEST AT THE TIME OF PRINTING AND SUBJECT TO CHANGE WITHOUT NOTICE 。

CAUTION: SINCE THESE PARTS MARKED BY ⚠ ARE CRITICAL FOR SAFETY,USE ONES DESCRIBED IN PARTS LIST ONLY 。

ATTENTION: LES PIECES REPAREES PAR UN ⚠ ETANT DANGEREUSES AN POINT DE VUE SECURITE N'UTILISER QUE CELLS DECRITES DANS LA NOMENCLATURE DES PIECES。

PCB010
TMA511

WAVEFORMS

MICON/TUNER

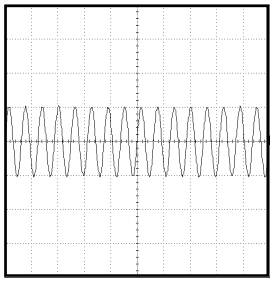

① 200mV 200ms/div

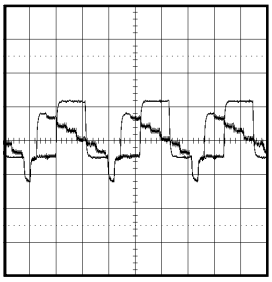

⑥ 0.5V 20µs/div

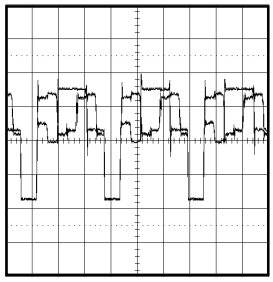

⑪ 1V 20µs/div

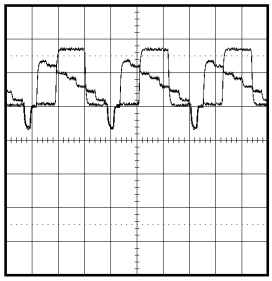

② 0.5V 20µs/div

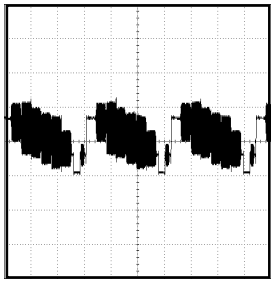

⑦ 500mV 20µs/div

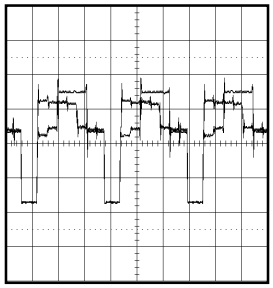

⑫ 1V 20µs/div

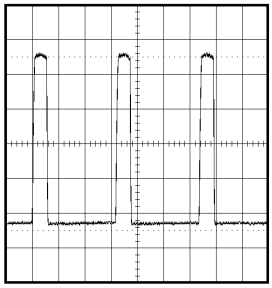

③ 200mV 20µs/div

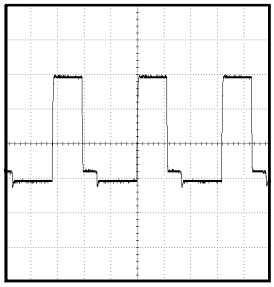

⑧ 20V 20µs/div

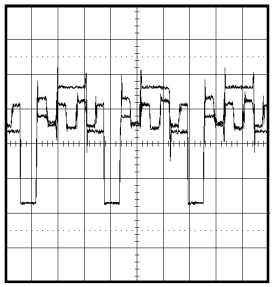

⑬ 1V 20µs/div

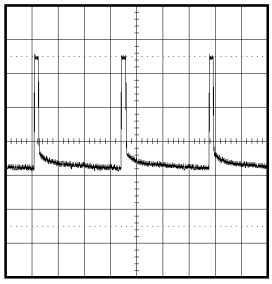

④ 200mV 5ms/div

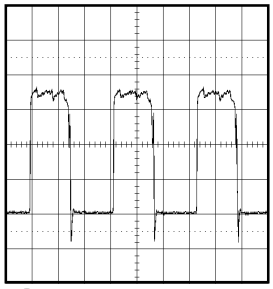

⑨ 200mV 20µs/div

DEFLECTION/CRT

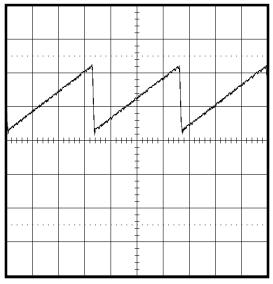

⑭ 0.5V 5ms/div

CHROMA

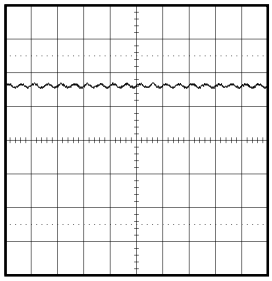

⑤ 0.5V 2ms/div

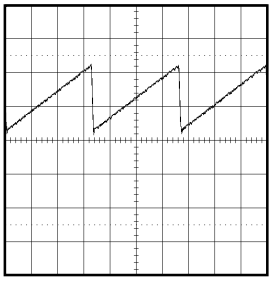

⑩ 0.5V 5ms/div

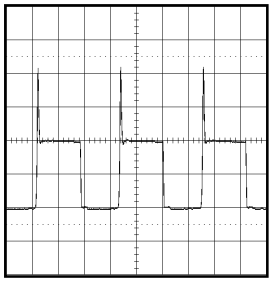

⑮ 20V 20µs/div

NOTE: The following waveforms were measured at the point of the corresponding balloon number in the schematic diagram.

WAVEFORMS

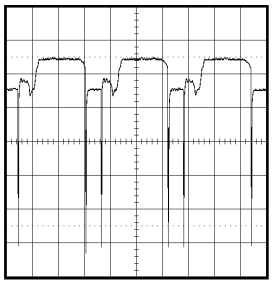

⑯ 2V 20µs/div

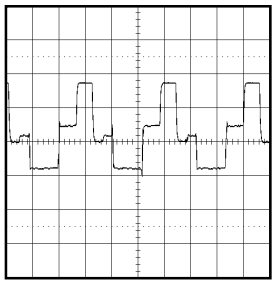

㉑ 50V 20µs/div

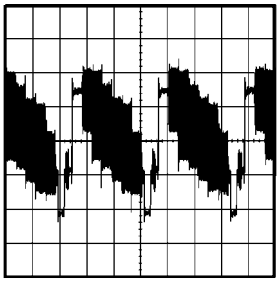

㉖ 500mV 20us/div

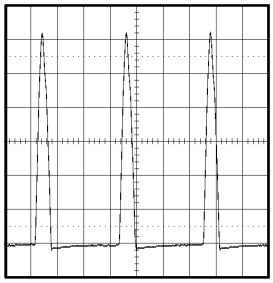

⑰ 200V 20µs/div

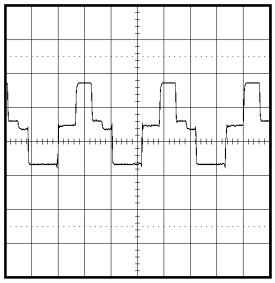

㉒ 50V 20µs/div

SOUND/AV

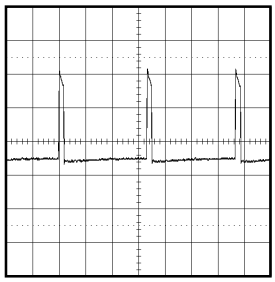

⑱ 10V 5ms/div

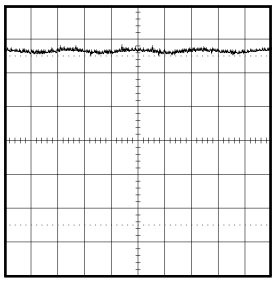

㉓ 0.5V 1ms/div

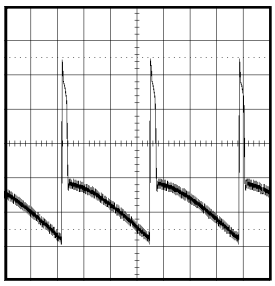

⑲ 10V 5ms/div

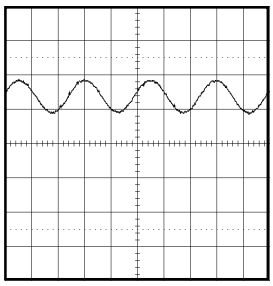

㉔ 1V 1ms/div

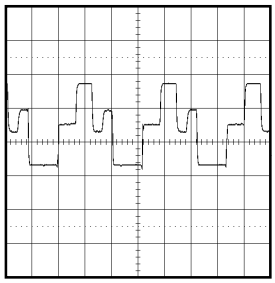

⑳ 50V 20µs/div

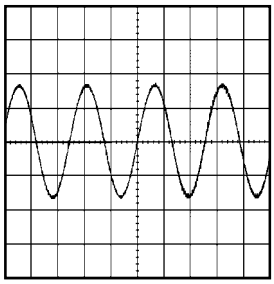

㉕ 500mV 1ms/div

NOTE: The following waveforms were measured at the point of the corresponding balloon number in the schematic diagram.

MECHANICAL EXPLODED VIEW

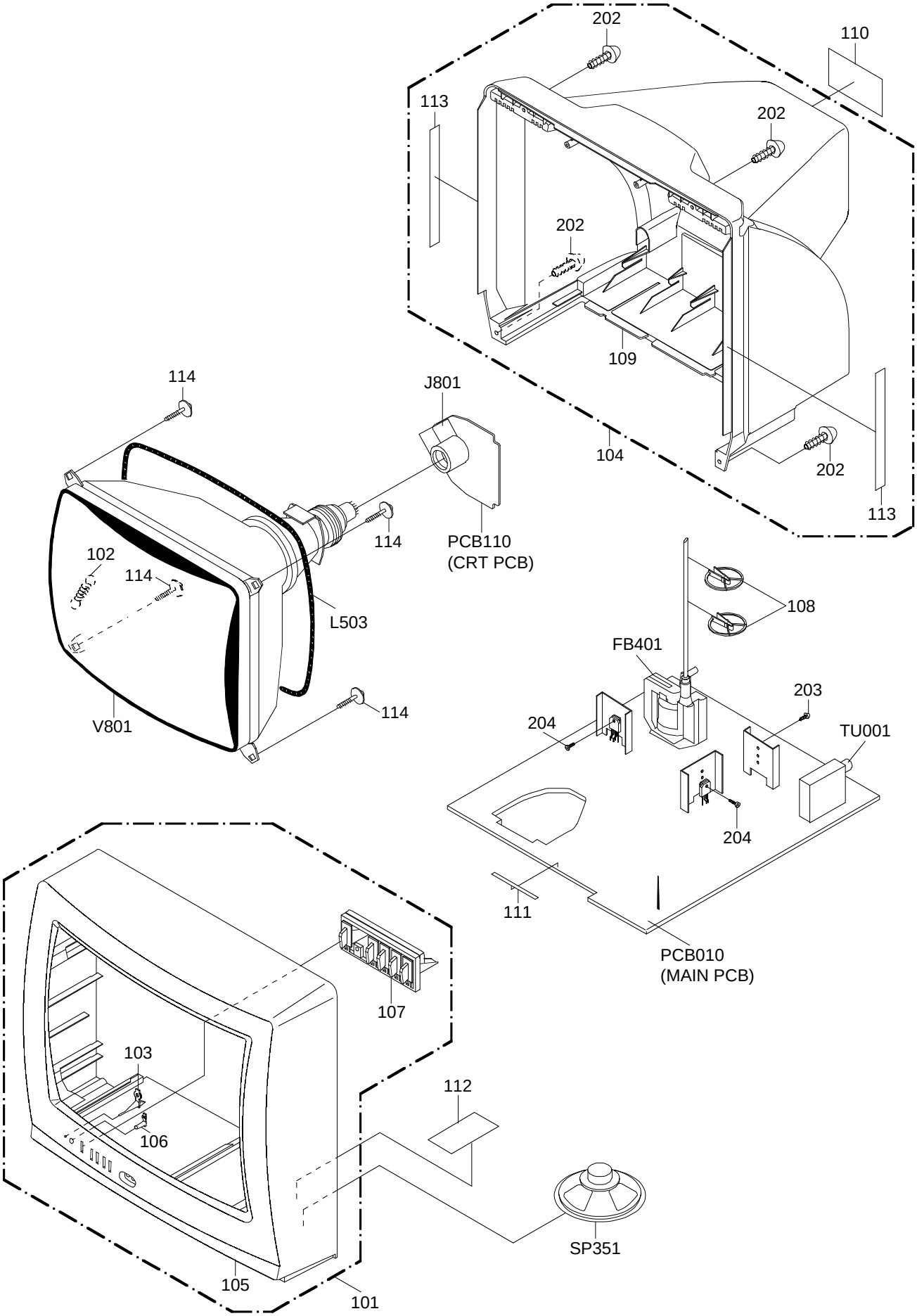

MECHANICAL REPLACEMENT PARTS LIST

Location No.	TSB P/N	Reference No.	Description	
101	AD300692	A3J910A720	CABINET,FRONT ASSY	
102	BZ710009	741WUA0019	SPRING,EARTH	
103	AD300695	713WPAA051	GLASS,LED	
104	AD300841	A3J910A740	CABINET,BACK ASSY	
105	AD300693	701WPJB223	CABINET,FRONT	
106	AD300694	713WPAA050	GUIDE,REMOCON	
107	AD300696	735WPBA247	BUTTON,FRAME	
108	BZ710260	899HV3T000	HOLDER,ANODE WIRE	
109	AD300842	702WPAA176	CABINET,BACK	
110	AD300698	722549A019	SHEET,RATING	
111	AD300843	800WQ00044	FELT SHEET	
112	AD300007	7230006755	SHEET,CAUTION	
113	AD300844	800WQ00038	FELT,SHEET	
114	BZ710321	8121F50B84	SCREW,TAPPING(B0) GW20 FLAT	5x28
201	BZ710019	8109630802	SCREW,TAP TITE(B) BRAZIER	3x8
202	BZ710035	8117540A64	SCREW,TAPPING(B0) TRUSS	4x16
203	BZ710239	8109I30A04	SCREW,TAP TITE(B) WH7	3x10
---	AD300700	792WHAA054	PACKAGE,TOP	
---	AD300701	792WHAA055	PACKAGE,BOTTOM	
---	AD300702	793WCDA989	GIFT BOX	
---	AD300703	A3J813A975	INSTRUCTION BOOK KIT	
---	AD300436	J3I70416	IMPORTANT SAFETY INSTRUCTIONS	
---	AD300022	J3I70417	REGISTRATION CARD	
---	AD300023	J3I70436	ESP CARD	
---	AD300704	J3J81301	INSTRUCTION BOOK	
---	AD300812	JB5UD400	POLY BAG	

ELECTRICAL REPLACEMENT PARTS LIST

Location No.	USA-TOSHIBA	Reference No.	Description	
		RESISTORS		
⚠R401	BZ210013	R4X5T4104F	R,METAL	100K OHM 1/4W
⚠R405	BZ210023	R4X5T4183F	R,METAL	18K OHM 1/4W
⚠R406	AD300655	R903N8222J	RC	2.2K OHM 1/8W
⚠R407	BZ210052	R002T21R8J	RC	1.8 OHM 1/2W
⚠R408	BZ210092	R4X5T6103F	R,METAL	10K OHM 1/6W
⚠R409	BZ210114	R4X5T6123F	R,METAL	12K OHM 1/6W
⚠R426	AD300651	R002T4272J	RC	2.7K OHM 1/4W
⚠R429	BZ210046	R6558A1R8J	R,FUSE	1.8 OHM 2W
⚠R500	BZ210080	R0G3K2275K	RC	2.7M OHM 1/2W
⚠R501	AD300652	R5X2CD3R3J	R,CEMENT	3.3 OHM 5W
⚠R504	AD300653	R3X28B180J	R,METAL OXIDE	18 OHM 3W
⚠R505	AD300654	R3X181152J	R,METAL	1.5K OHM 1W
⚠R509	AD300655	R903N8222J	RC	2.2K OHM 1/8W
⚠R515	AD300656	R002T2683J	RC	68K OHM 1/2W
⚠R517	AD300657	R3X18A4R7J	R,METAL OXIDE	4.7 OHM 2W
⚠R518	BZ210084	R4X5T4272F	R,METAL	2.7K OHM 1/4W
⚠R519	AD300658	R903N8122J	RC	1.2K OHM 1/8W
R524	BZ210010	R3X28B1R2J	R,METAL	1.2 OHM 3W
⚠R542	AD300659	R3X181R47J	R,METAL	0.47 OHM 1W
⚠R629	AD300660	R3X28B330J	R,METAL OXIDE	33 OHM 3W
⚠R641	AD300661	R425T6273F	R,METAL	27K OHM 1/6W
⚠R803	BZ210050	R3X18A123J	R,METAL OXIDE	12K OHM 2W
⚠R805	BZ210050	R3X18A123J	R,METAL OXIDE	12K OHM 2W
⚠R807	BZ210050	R3X18A123J	R,METAL OXIDE	12K OHM 2W
		CAPACITORS		
⚠C403	BZ110149	E02LT4471M	CE	470 UF 35V
⚠C414	AD300662	E02LT4101M	CE	100 UF 35V
⚠C418	BZ110041	E02LT3471M	CE	470 UF 25V
C422	AD300840	P613T1154J	CMPL	0.15 UF 100V TF
⚠C434	AD300064	E02LT8220M	CE	22 UF 100V
C437	AD300663	P4J7F3334J	CMPP	0.33 UF 250V PMS
C442	BZ110002	C01BBP713K	CC	0.001 UF 2KV BP
⚠C443	BZ110087	P414F9682H	CMPP	0.0068UF 1.6KV ECWH
⚠C446	BZ110157	E02LT5220M	CE	22 UF 50V
⚠C448	AD300664	E5EZTC220M	CE	22 UF 200V
⚠C502	BZ110080	C0J0B0513K	CC	0.001 UF 500V B
⚠C503	BZ110080	C0J0B0513K	CC	0.001 UF 500V B
⚠C505	BZ110145	P2472B104M	CMP	0.1 UF 275V PHE840
⚠C506	AD300665	CB3LE0MQ3M	CC	0.0047UF 250V
⚠C511	AD300666	E50HU5220M	CE	22 UF 50 V
C514	BZ110122	C0JLYR7U2K	CC	680 PF 2KV YR
⚠C515	BZ110081	E02LT2471M	CE	470 UF 16V
C517	BZ110125	C0JLYR7Q2K	CC	470 PF 2KV YR
⚠C519	BZ110081	E02LT2471M	CE	470 UF 16V
⚠C521	AD300060	E62NFB101M	CE	100 UF 160V
⚠C526	AD300607	E51CGC331M	CE	330 UF 200V
C609	AD300667	CQGTF0414Z	CC	0.01 UF 50V F
C819	AD300078	C0JBB0713K	CC	0.001 UF 2KV B
		DIODES		
D001	AD300072	D94TA30013	DIODE,ZENER	HZ30-3L TD
D109	BZ410054	0021721150	LED	SLR-342VCT32
⚠D401	BZ410018	D94TA27011	DIODE,ZENER	HZ27-1L TD
⚠D402	AD300668	D94TA11B11	DIODE,ZENER	HZ11B1L TD
D403	BZ410043	D2WT011E10	DIODE,SILICON	11E1-EIC
D404	BZ410066	D97U06R21B	DIODE,ZENER	MTZJ6.2B T-77
⚠D405	BZ410063	D2WTAU02A0	DIODE,SILICON	AU02A-EIC
D406	BZ410006	D1VT001330	DIODE,SILICON	1SS133T-77
D408	BZ410043	D2WT011E10	DIODE,SILICON	11E1-EIC
⚠D410	BZ410063	D2WTAU02A0	DIODE,SILICON	AU02A-EIC
⚠D411	BZ410063	D2WTAU02A0	DIODE,SILICON	AU02A-EIC
D412	BZ410019	D97U03001B	DIODE,ZENER	MTZJ30B T-77
D413	BZ410019	D97U03001B	DIODE,ZENER	MTZJ30B T-77
⚠D501	BZ410085	D2WXN40050	DIODE,SILICON	1N4005-EIC
⚠D502	BZ410085	D2WXN40050	DIODE,SILICON	1N4005-EIC
⚠D503	BZ410085	D2WXN40050	DIODE,SILICON	1N4005-EIC
⚠D504	BZ410085	D2WXN40050	DIODE,SILICON	1N4005-EIC
⚠D505	BZ410076	D2WXB290S0	DIODE,SILICON	SB290S
D506	AD300671	D97U01801B	DIODE,ZENER	MTZJ18B T-77
D507	AD300670	D97U01501B	DIODE,ZENER	MTZJ15B T-77
D508	BZ410006	D1VT001330	DIODE,SILICON	1SS133T-77
⚠D509	AD300671	D97U01801B	DIODE,ZENER	MTZJ18B T-77
⚠D510	BZ410080	D2WXRU2AM0	DIODE,SILICON	RU2AM-EIC
D512	BZ410006	D1VT001330	DIODE,SILICON	1SS133T-77
⚠D513	BZ410076	D2WXB290S0	DIODE,SILICON	SB290S
D514	BZ410006	D1VT001330	DIODE,SILICON	1SS133T-77
⚠D515	BZ410085	D2WXN40050	DIODE,SILICON	1N4005-EIC
D516	BZ410006	D1VT001330	DIODE,SILICON	1SS133T-77

ELECTRICAL REPLACEMENT PARTS LIST

Location No.	USA-TOSHIBA	Reference No.	Description	
		DIODES		
D518	BZ410006	D1VT001330	DIODE,SILICON	1SS133T-77
D519	BZ410006	D1VT001330	DIODE,SILICON	1SS133T-77
⚠D520	BZ410085	D2WXN40050	DIODE,SILICON	1N4005-EIC
⚠D521	BZ410085	D2WXN40050	DIODE,SILICON	1N4005-EIC
⚠D522	BZ410085	D2WXN40050	DIODE,SILICON	1N4005-EIC
D528	BZ410021	D97U05R61B	DIODE,ZENER	MTZJ5.6B T-77
D601	BZ410006	D1VT001330	DIODE,SILICON	1SS133T-77
D602	BZ410058	D97U08R21B	DIODE,ZENER	MTZJ8.2B T-77
D605	BZ410043	D2WT011E10	DIODE,SILICON	11E1-EIC
D610	AD300070	D97U01201B	DIODE,ZENER	MTZJ12B T-77
D611	AD300070	D97U01201B	DIODE,ZENER	MTZJ12B T-77
D612	AD300070	D97U01201B	DIODE,ZENER	MTZJ12B T-77
D613	BZ410006	D1VT001330	DIODE,SILICON	1SS133T-77
D615	BZ410006	D1VT001330	DIODE,SILICON	1SS133T-77
D616	BZ410006	D1VT001330	DIODE,SILICON	1SS133T-77
		ICS		
IC101	AD300672	I56F07063A	IC	OEC7063A
IC199	AD300673	A3J910A015	IC	S-24C02BDP-1A
⚠IC351	BZ611001	I01DP75110	IC	AN7511
⚠IC401	BZ611053	I01TD55220	IC	AN5522
IC601	BZ611055	I06FC61206	IC	M61206FP
		TRANSISTORS		
⚠Q401	BZ510036	TD30026270	TRANSISTOR,SILICON	2SD2627LS-CBC11
⚠Q402	AD300674	TCAT032070	TRANSISTOR,SILICON	KTC3207-AT
⚠Q501	AD300675	T25FK26620	TRANSISTOR,FIELD EFF	ECT 2SK2662
⚠Q502	BZ510070	TCAT032034	TRANSISTOR,SILICON	KTC3203_Y-AT
Q503	BZ510004	TA3T016240	TRANSISTOR,SILICON	2SA1624-AA
⚠Q504	BZ410088	0002E00610	PHOTO COUPLER	LTV-817M-VB
Q507	BZ510069	TCATC31980	TRANSISTOR,SILICON	KTC3198-AT(Y,GR)
Q603	BZ510070	TCAT032034	TRANSISTOR,SILICON	KTC3203_Y-AT
Q604	BZ510070	TCAT032034	TRANSISTOR,SILICON	KTC3203_Y-AT
Q605	BZ510070	TCAT032034	TRANSISTOR,SILICON	KTC3203_Y-AT
Q606	BZ510070	TCAT032034	TRANSISTOR,SILICON	KTC3203_Y-AT
Q607	BZ510023	TNYTB03001	COMPOUND TRANSISTOR	DTC114ESTP
Q801	BZ510009	TC3F042170	TRANSISTOR,SILICON	2SC4217(D,E)-RAC
Q802	BZ510009	TC3F042170	TRANSISTOR,SILICON	2SC4217(D,E)-RAC
Q803	BZ510009	TC3F042170	TRANSISTOR,SILICON	2SC4217(D,E)-RAC
		COILS & TRANSFORMERS		
L101	AD300676	021LA63R3K	COIL	3.3 UH
⚠L501	AD300677	029T00A7M1	COIL,LINE FILTER	1R5A102F20
⚠L503	BZ310092	028R200029	COIL,DEGAUSS	8R200029
L601	AD300678	0216731R2K	COIL	1.2 UH
L606	BZ310009	021LA62R2K	COIL	2.2 UH
L607	BZ310043	021LA6150K	COIL	15 UH
L801	BZ310041	02167F101J	COIL	100 UH
T401	BZ310025	03305Y002S	TRANS,HORIZONTAL DRIVE	305Y002
⚠T502	AD300679	0481290184	TRANSFORMER,SWITCHING	81290184
		JACKS		
J702	AD300680	060Q401077	RCA JACK	AV1-09D-3
J703	AD300681	060Q401076	RCA JACK	AV1-09D-4
⚠J801	BZ614057	066C130015	SOCKET,CATHODE RAY TUBE	CVT3275-5102
		SWITCHES		
SW101	BZ612001	0504201T31	SWITCH,TACT	SKHVBED010
SW102	BZ612001	0504201T31	SWITCH,TACT	SKHVBED010
SW103	BZ612001	0504201T31	SWITCH,TACT	SKHVBED010
SW104	BZ612001	0504201T31	SWITCH,TACT	SKHVBED010
SW105	BZ612001	0504201T31	SWITCH,TACT	SKHVBED010
		P.C.BOARD ASSEMBLIES		
PCB010	AD300682	A3J910A01A	PCB ASS'Y	TMA511A
PCB110	AD300683	A3J910A11A	PCB ASS'Y	TCA366A
		MISCELLANEOUS		
CD351	AD300684	06CH122301	CORD,CONNECTOR	CH122301
⚠CD501	AD300685	120R414903	CORD,AC BUSH	0R414903
CD801	BZ614175	06CU82039A	CORD,CONNECTOR	SM1098-009-1A
CF601	AD300621	1022T45R73	FILTER,SAW	SAFGP45M7VHCZR
CF603	BZ613015	1011T4R504	FILTER,CERAMIC	EFCT4R5YS5A
CF604	AD300686	1012T4R519	FILTER,CERAMIC TRAP	TPSRA4M50C00-A0
⚠CP401	BZ614020	069X450029	CONNECTOR PCB SIDE	B05B-DVS
⚠CP502	AD300687	069S420110	CONNECTOR PCB SIDE	A1561WV2-2P
CP601	BZ614135	0694260139	CONNECTOR PCB SIDE	173979-6
CP801	BZ614269	069S320010	CONNECTOR PCB SIDE	A2361WV2-2P
CP802A	BZ614273	067U010049	WIRE HOLDER	B2013H02-10P
CP802B	BZ614273	067U010049	WIRE HOLDER	B2013H02-10P
EL001	BZ614043	124116281A	EYE LET	XRY16X28BD
EL002	BZ614044	124120301A	EYE LET	XRY20X30BD
⚠F501	AD300688	081PC04004	FUSE	51MS040LCC
⚠FB401	BZ310097	043219011F	TRANSFORMER,FLYBACK	FQI-20B001

ELECTRICAL REPLACEMENT PARTS LIST

Location No.	USA-TOSHIBA	Reference No.	Description	
		MISCELLANEOUS		
FH501	BZ614005	06710T0006	HOLDER,FUSE	EYF-52BC
FH502	BZ614005	06710T0006	HOLDER,FUSE	EYF-52BC
OS101	BZ614171	077Q014003	REMOTE RECEIVER	PIC-28143SY-2
⚠SP351	AD300689	070Y132018	SPEAKER	S08F21
⚠TH501	BZ410079	DF5EL3R0A0	DEGAUSS ELEMENT	ZPB45BL3R0A
TM101	AD300690	076N0EH010	TRANSMITTER	RC-EH010
⚠TU001	AD300691	0145S00052	TUNER,VHF-UHF	ENV56D66G3
⚠V801	BZ614165	098Q200481	CRT W/DY	A48AGY13X77
X101	AD300624	1001T8R004	CERAMIC,OSCILLATOR	EFOEC8004T4
X602	BZ613004	100CT3R505	CRYSTAL	HC-49/C

RESISTOR

RC.....	CARBON RESISTOR

CAPACITORS

CC.....	CERAMIC CAPACITOR
CE.....	ALUMI ELECTROLYTIC CAPACITOR
CP.....	POLYESTER CAPACITOR
CPP.....	POLYPROPYLENE CAPACITOR
CPL.....	PLASTIC CAPACITOR
CMP.....	METAL POLYESTER CAPACITOR
CMPL.....	METAL PLASTIC CAPACITOR
CMPP.....	METAL POLYPROPYLENE CAPACITOR

TOSHIBA AMERICA CONSUMER PRODUCTS,INC.
HEAD OFFICE / 82 TOTOWA ROAD,WAYNE,NEW JERSEY 07470 U.S.A.